ITER Project and USIPO Activities

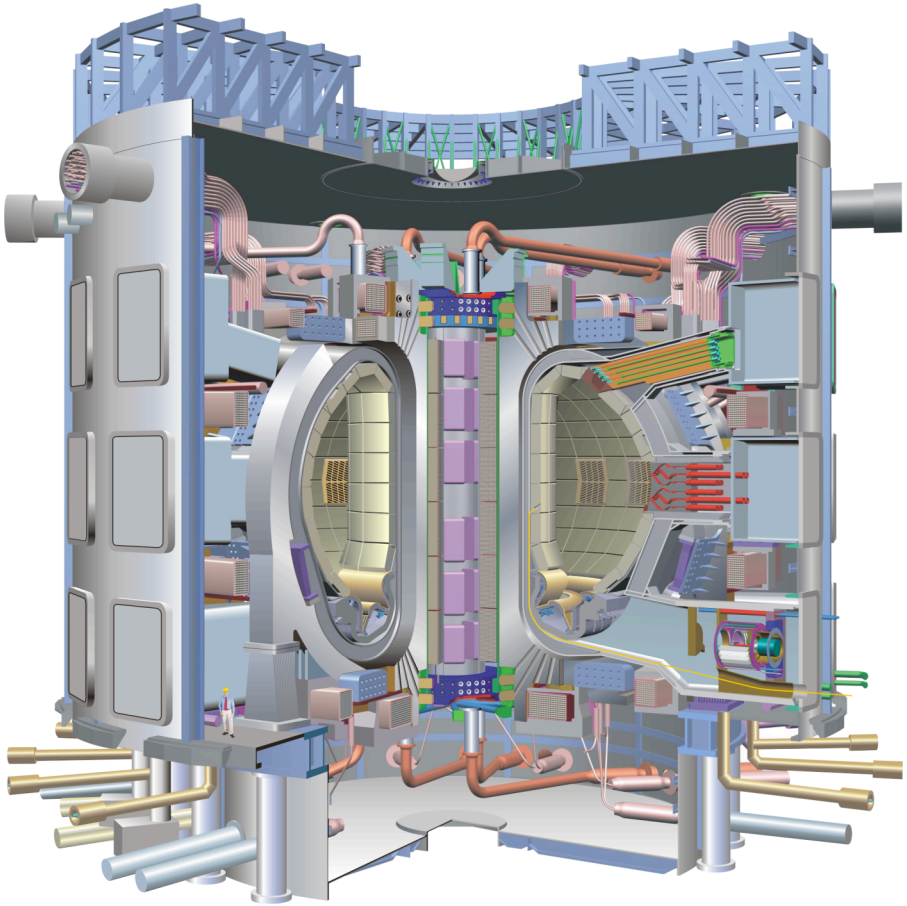

Jeff Hoy
U.S. ITER Program Manager

Ned Sauthoff
U.S. ITER Project Manager

FY 2009 OFES Budget Planning Meeting
Gaithersburg, MD
March 13, 2007

Outline

- **Federal Program Manager's Overview**
- **U.S. contributions**
  - Hardware contributions
  - Staff and Cash
  - Project Management
- **Budget cross-cuts**
- **Summary**

Outline

- **Federal Program Manager's Overview**
- **U.S. contributions**
  - Hardware contributions
  - Staff and Cash
  - Project Management
- **Budget cross-cuts**
- **Summary**

U.S. Contributions to ITER Project
FES Perspective

- **Much was accomplished in 2006:**
  - The seven-party ITER Agreement was signed and is being provisionally applied => we now have a project to build (the hardest part)!
  - The international ITER Organization (IO) was formally established on December 1st, and began staffing up at the Cadarache site. The Garching and Naka EDA sites were closed.
  - The U.S. ITER Project Office team (ORNL/PPPL/SRNL) became fully operational, with the central office located at Oak Ridge.
  - DOE/SC (Lehman) conducted status reviews, focused mainly on cost, in February and September 2006. It was noted that, "the U.S. ITER Project has made good organizational progress—a very competent and experienced team is on board."

Signing Ceremony – November 21, 2006
Paris, France

- After fulfilling the requirements of the Energy Policy Act of 2005, including the 120-day review period by Congress of the ITER Agreement, Dr. Ray Orbach, on behalf of the U.S., signed the ITER Joint Implementation Agreement on November 21st.

- The Arrangement of Provisional Application, also signed on November 21st, affords the ITER Organization to pursue cooperation as provided in the ITER Agreement and to abide by the terms of the Agreement until it enters into force.

First Interim ITER Council Meeting (November 21, 2006)

- **The Council:**
  - Empowered Ambassador Ikeda to exercise, on a provisional basis, the roles and functions defined for the Director-General of the ITER Organization and charged him with undertaking all measures necessary to bring the provisional ITER Organization into operation.
  - Adopted, on a provisional basis, a) the Draft Rules of Procedure of the ITER Council, b) the Staff Regulations and, c) the Project Resource Management Regulations.
  - Agreed on the establishment of Management Advisory Committee and the Science and Technology Advisory Committee as subsidiary bodies of the Interim ITER Council
    - details of chairmanship, membership and terms of reference to be addressed at March IIC preparatory meeting.
  - Approved project plan, resource estimates, and 2007 annual budget.

U.S. Contributions to ITER Project
FES Perspective

- **Activities Underway or Planned for 2007:**
  - An ITER Design Review effort has been initiated to update the Baseline Design, resolve priority issues, and develop a preliminary experimental operations plan. Participation is voluntary and non-creditable. Output is due to the Council in November 2007.
  - Ratification of the Agreement is expected in mid-2007.
  - Some U.S. design and R&D activities have been delayed by the FY2007 Continuing Resolution – will receive full $60M, but late.
  - Next U.S. ITER Project Critical Decision (CD-1) is targeted for July 2007
  - Next DOE/SC progress review in mid-October 2007

U.S. Contributions to ITER Project
FES Perspective

- **FY 2008 Budget Request:**
  - Consistent with previous project Budget Authority (BA) profile ($160M) and cost cap ($1.122B).
  - Provides for long-lead procurement (TF conductor, First Wall/Shield, Tokamak Cooling Water piping) in addition to design/R&D.
  - Assumes CD-4 (Approve Project Completion) by end of FY 2014.
- **Timing of CD-2 (Approve Performance Baseline) depends on outcome and schedule of Design Review – estimate is late FY 2008.**
  - Will formally establish U.S. schedule and Total Project Cost.

Current U.S. ITER Project BA Profile for $1.122B TPC Cap

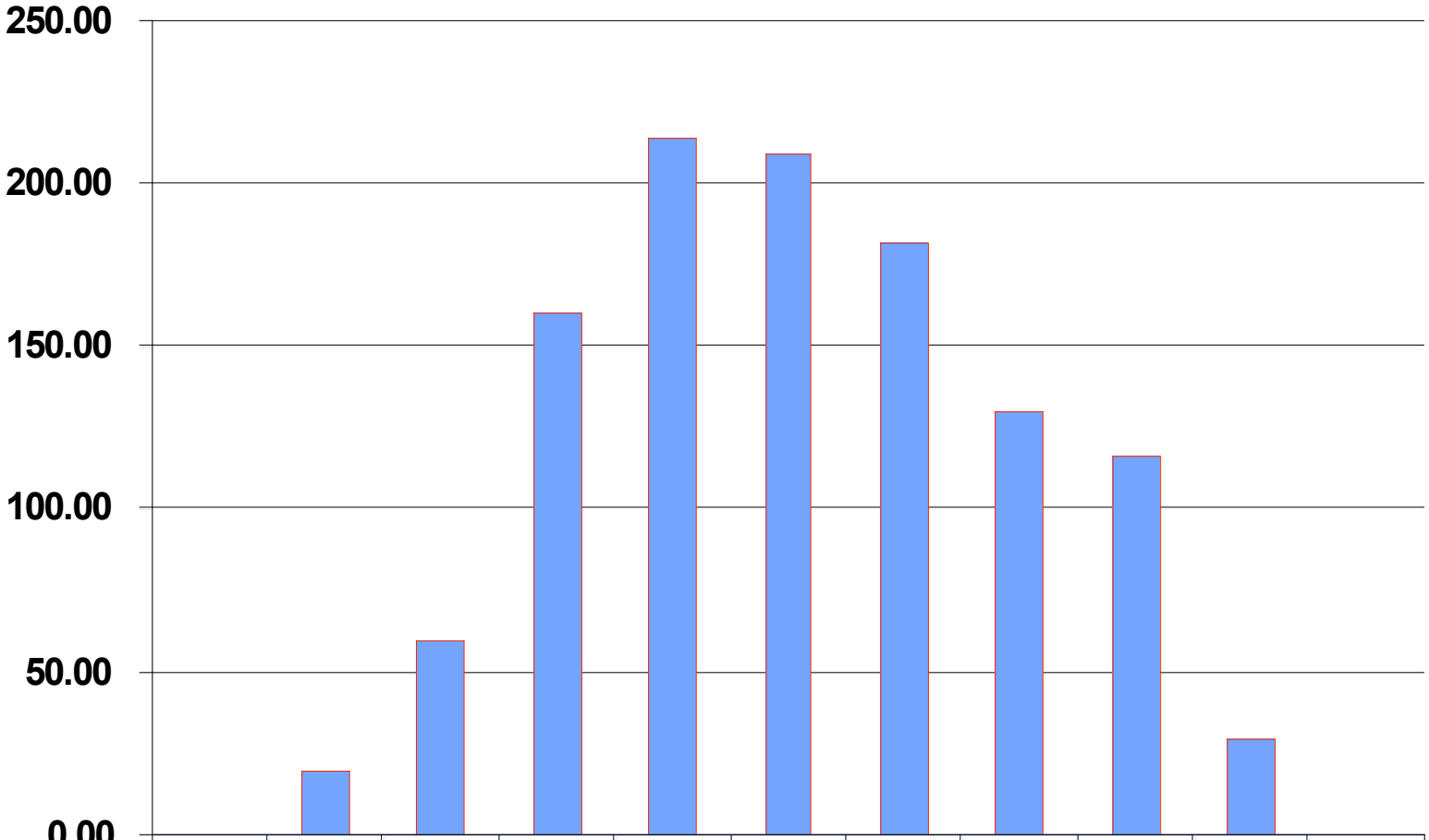

	FY05	FY06	FY07	FY08	FY09	FY10	FY11	FY12	FY13	FY14	
Budget request	0.00	19.32	60.00	160.00	214.50	209.32	181.96	130.00	116.90	30.00	

Other points of interest related to ITER

- **The Broader Approach Agreement has been signed by EU and JA. The U.S. has requested the status and plans for integration with the ITER Project.**

- **March 2007 Interim ITER Council Preparatory Meeting planned. Key topics include:**
  - 2007 Staffing Plan
  - 2007 Budget and Resource Requirements
  - Procedures for the Conclusion of Procurement Arrangements and Guidelines for the Management of In-Kind Equipment
  - Update on Design Review
  - Broader Approach
  - Scientific Program including Test Blanket Modules

Outline

- **Federal Program Manager's Overview**
- **U.S. contributions**
  - Hardware contributions
  - Staff and Cash
  - Project Management
- **Budget cross-cuts**
- **Summary**

Scope and Schedule Overview

- **The IO and U.S. are working toward finalization of U.S. procurement arrangements**
  - IO integration of scopes, schedules and designs
  - Domestic Agency performance of R&D and prototyping, detailed design, and fabrication
  - IO assembly, installation and commissioning
  - Targeting first plasma in 2016

- **The IO is leading a Design Review, in which the U.S. is participating**
  - to update the 2001 ITER FDR
  - to resolve priority issues
  - to establish the updated project baseline, including a preliminary project development / research plan

- **FY07-09 marks the transition to fabrication**

The Schedule

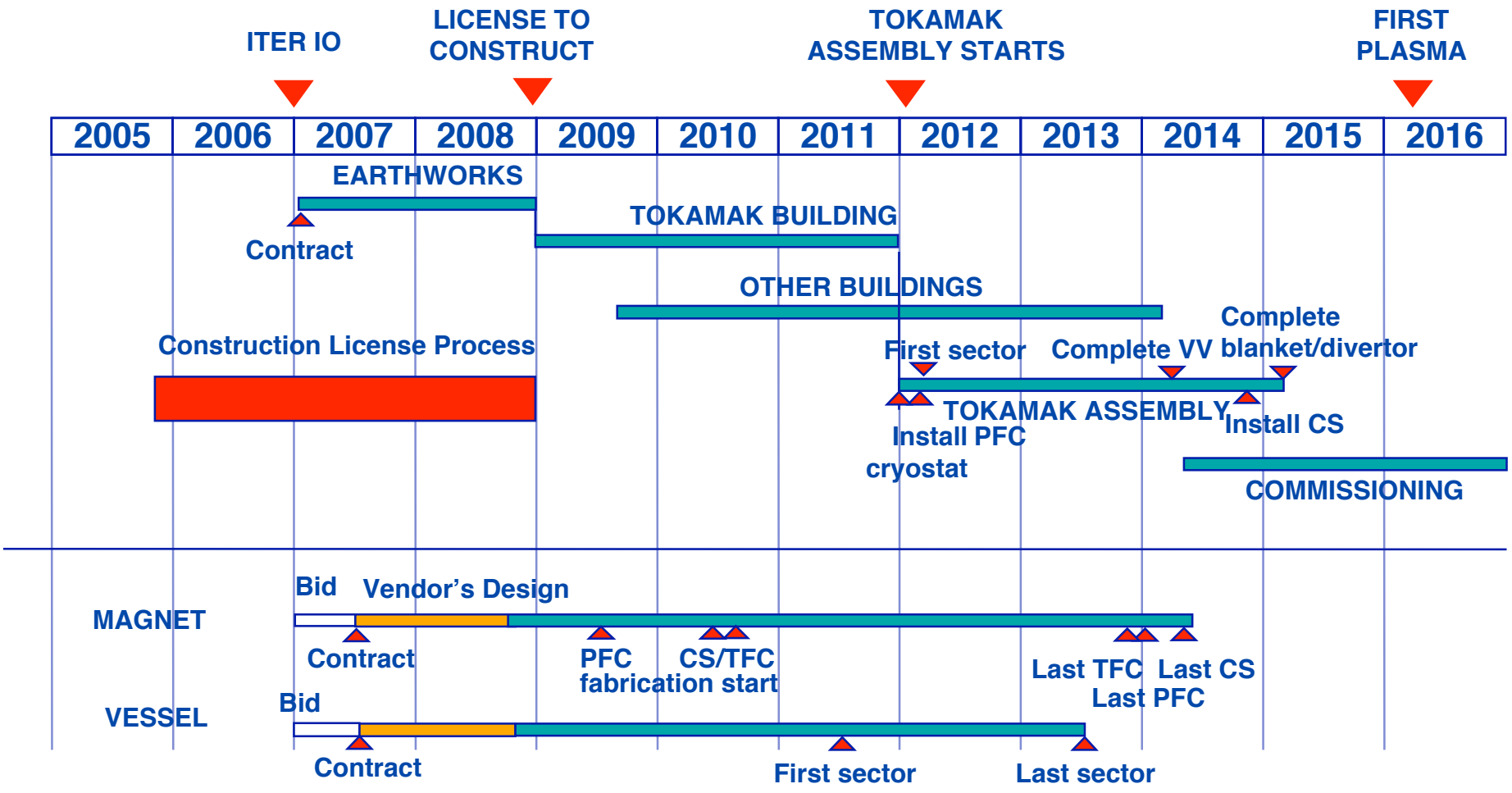

Site Preparation

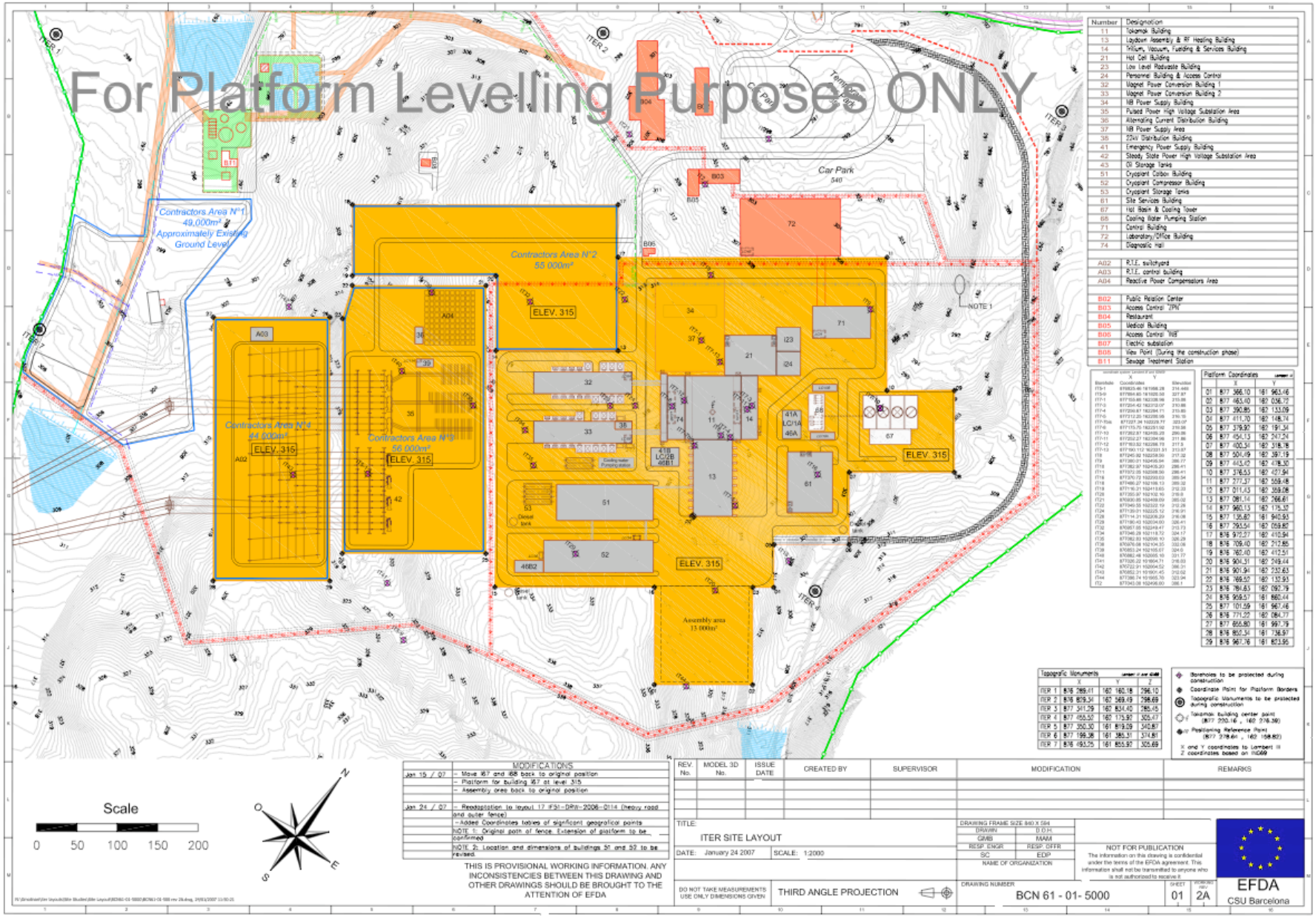

Outline

- **Federal Program Manager's Overview**
- **U.S. contributions**
  - Hardware contributions
  - Staff and Cash
  - Project Management
- **Budget cross-cuts**
- **Summary**

U.S. ITER In-kind Hardware Contributions

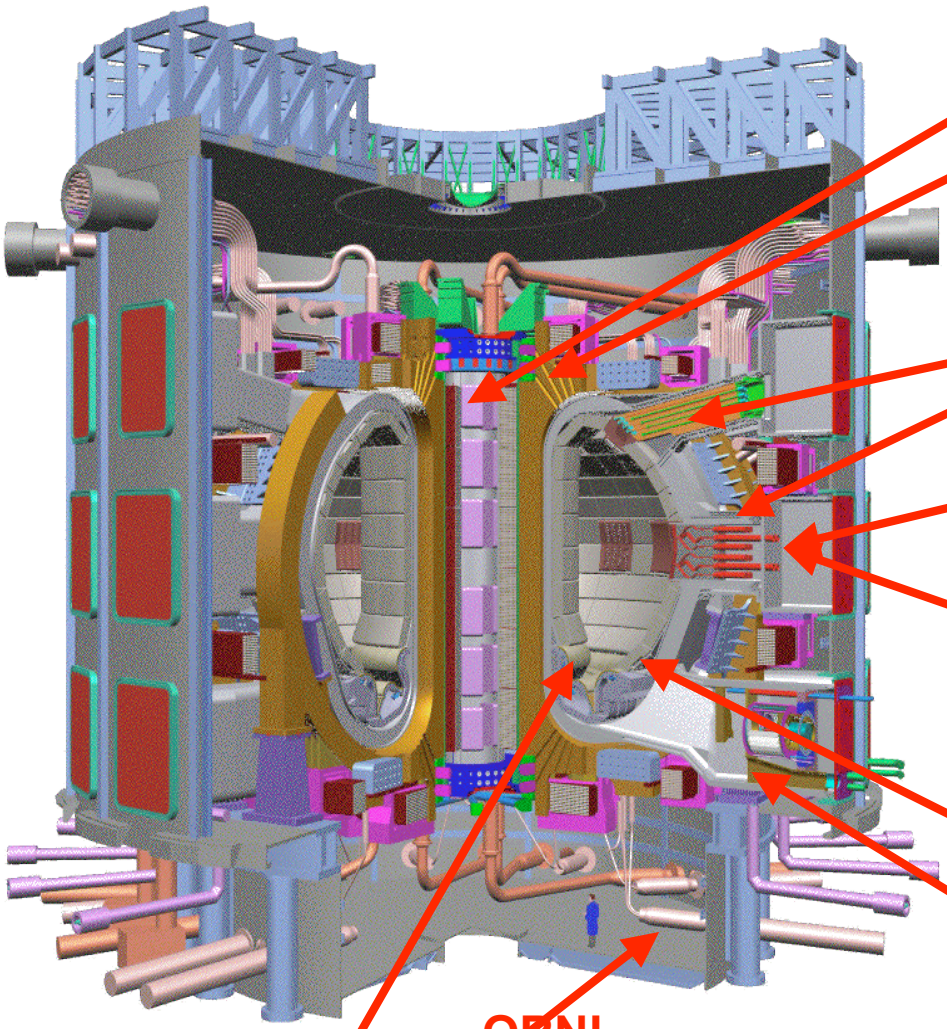

ORNL 7 Central Solenoid windings

ORNL 8% of Toroidal Field conductor

PPPL 15% of port-based diagnostics

ORNL 100% Ion Cyclotron transmission lines

ORNL 100% Electron Cyclotron transmission lines

ORNL 20% Blanket/Shield

ORNL Roughing pumps, standard components

ORNL pellet injector

ORNL 75% Cooling for divertor, vacuum vessel, …

PPPL Steady-state power supplies

SRNL Tokamak exhaust processing system

Magnet Systems Tasks:
TF Conductor and Central Solenoid

TF Coil:
US produces 9 “long” double-pancake lengths of active cable-in-conduit conductor (CICC) plus 1 dummy length (8 % of total)

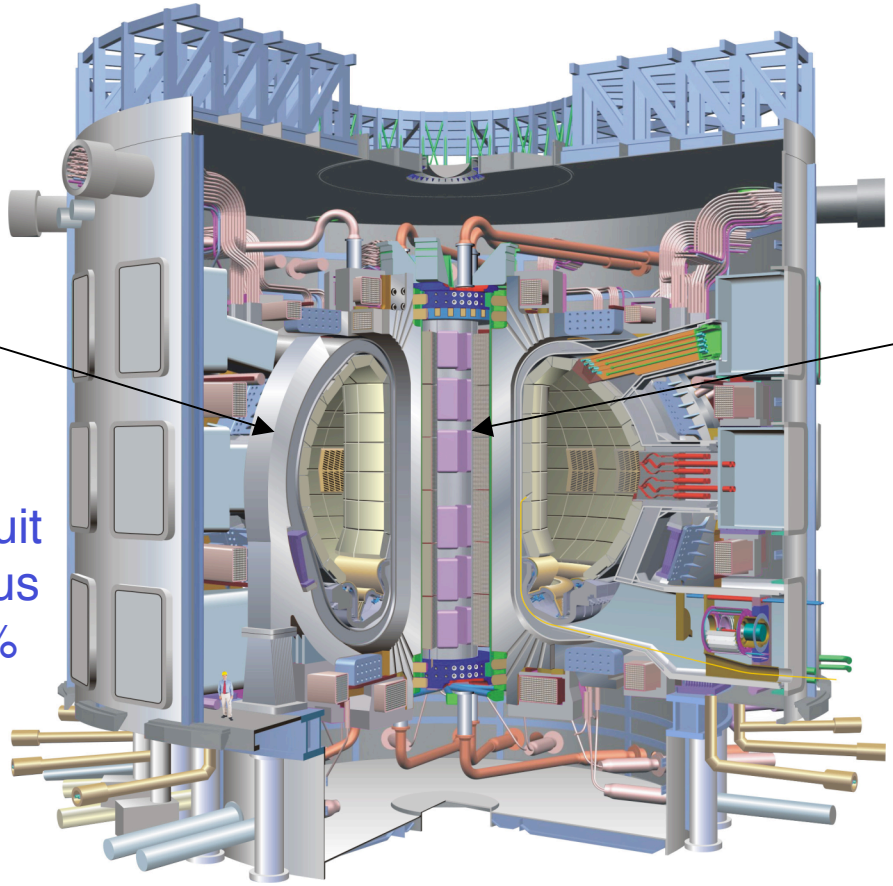

CS Coil:
US produces 7 coil modules (6 and 1 spare) using JA-supplied CICC plus the structure for precompression and suspension of the CS from the TF assembly

Toroidal Field Coil Conductor

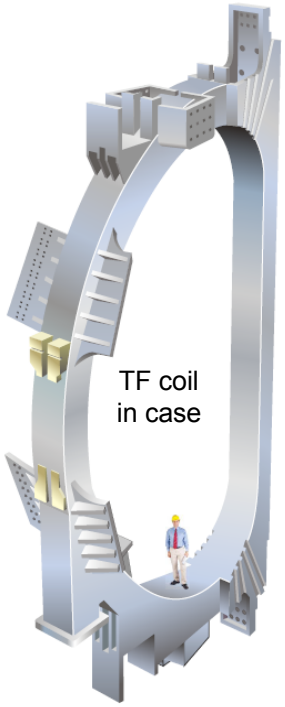

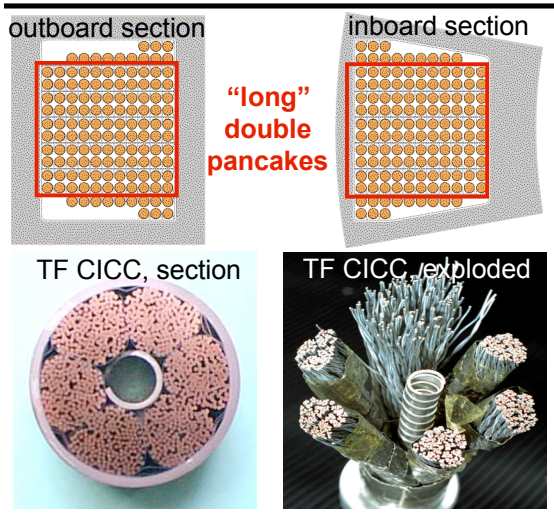

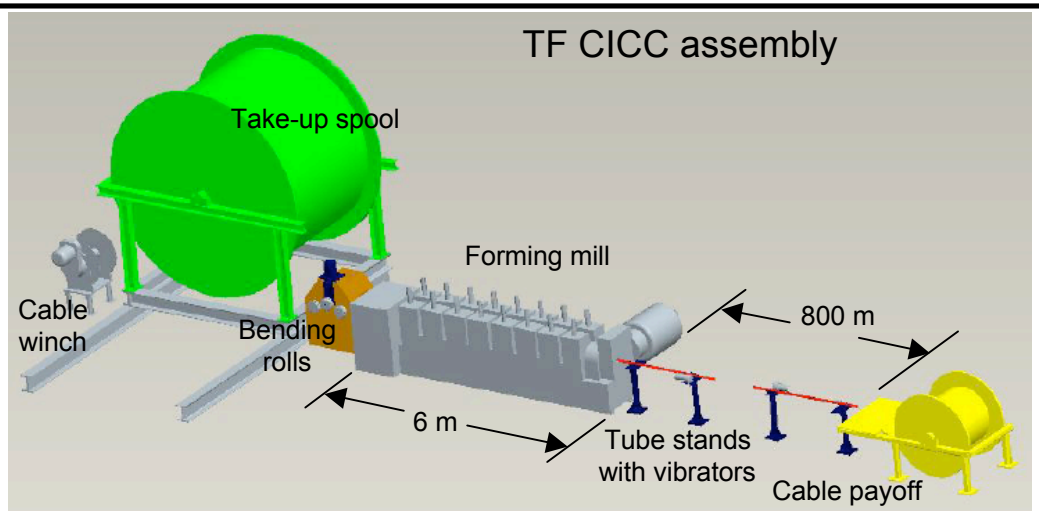

	R&D	Design & Fabrication
FY 2007:	Fabricate and test conductor qualification samples (baseline and alternate geometries using wire from 2 vendors) in the SULTAN test facility.	Through initial procurements, assess capabilities of US vendors for meeting CICC delivery obligation and compare to the option of acquiring services from other PTs.
FY 2008:	Complete R&D on conductor.	Award procurement contracts (wire, cabling services, conduit steel, & tubing)
FY 2009:		Continue fabrication and procurement of components.

Central Solenoid Coil

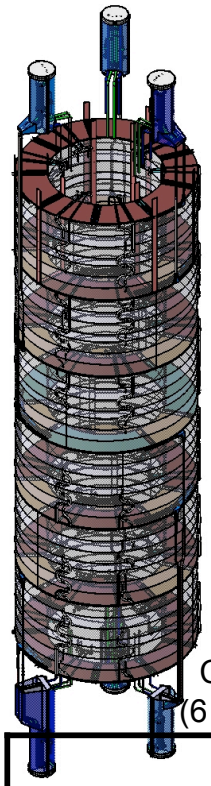

CS stack
(6 modules)

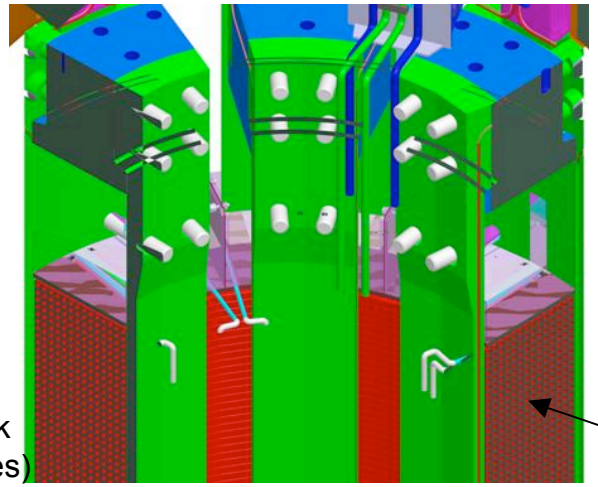

CS module
winding
pack

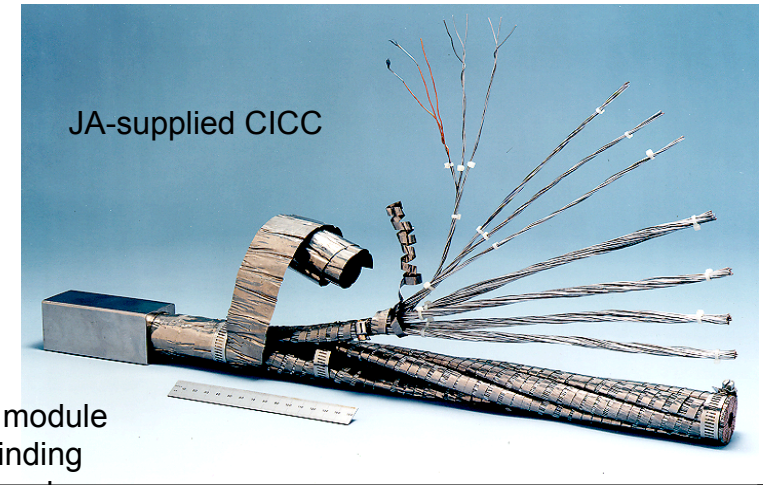

	R&D	Design & Fabrication
FY 2007:	Develop and prove internal butt joints (baseline) and lap joints (alternate). Begin characterization of jacket and wire of JA-supplied CICC.	Complete design-criteria review. Complete critical-component analyses. Select engineering support contractors. Draft ITER Procurement Arrangement.
FY 2008:	Complete major R&D tasks (joint development, NDE process, materials characterization).	Select coil manufacturer. Begin detailed coil design. Have ITER Procurement Arrangement approved.
FY 2009:		Complete detailed design. Fabricate tooling & fixtures. Start prototype coil.

Central Solenoid Structure

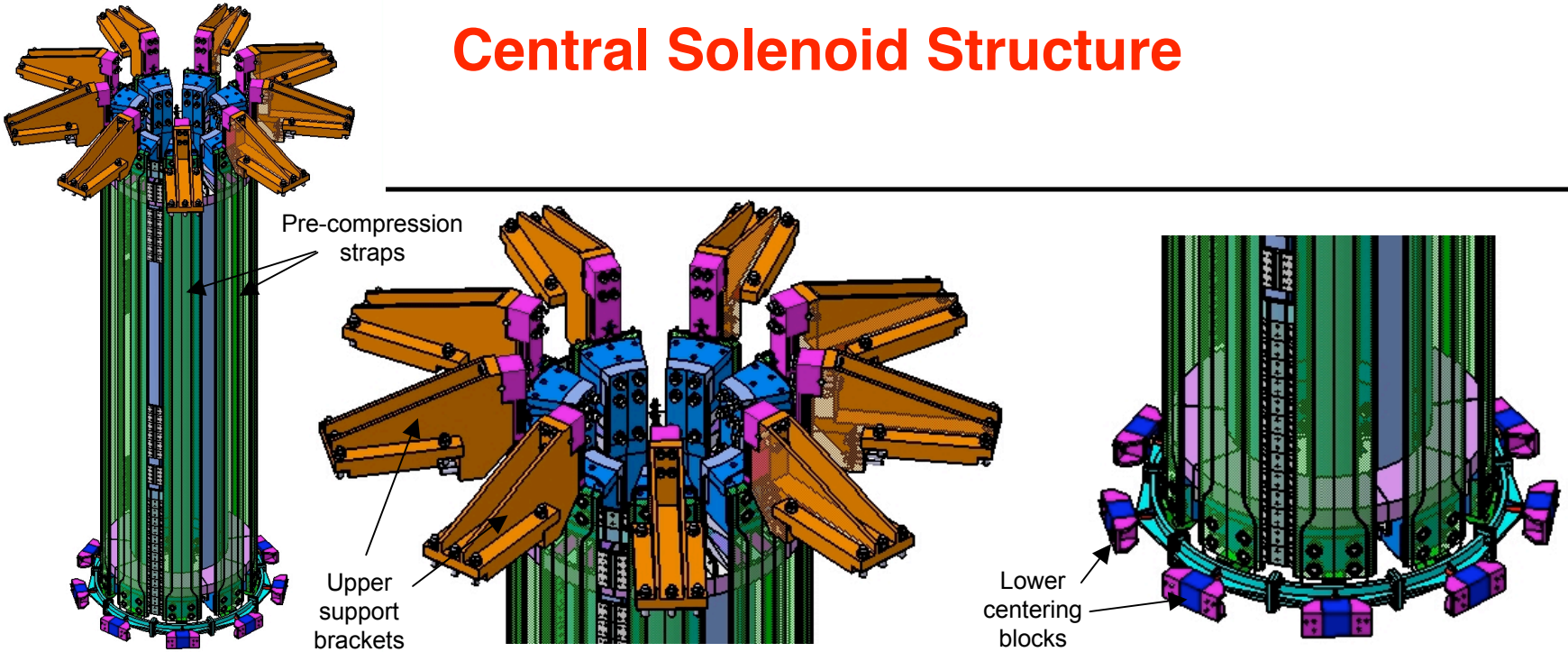

	R&D	Design & Fabrication
FY 2007:	Start development of fabrication methods and tests. Develop materials database.	Continue planning based on CS coil design and interfaces with the IO.
FY 2008:	Complete R&D.	Continue preliminary design and analysis.
FY 2009:		Complete design and produce fabrication drawings.

Blanket and Port Limiter Systems

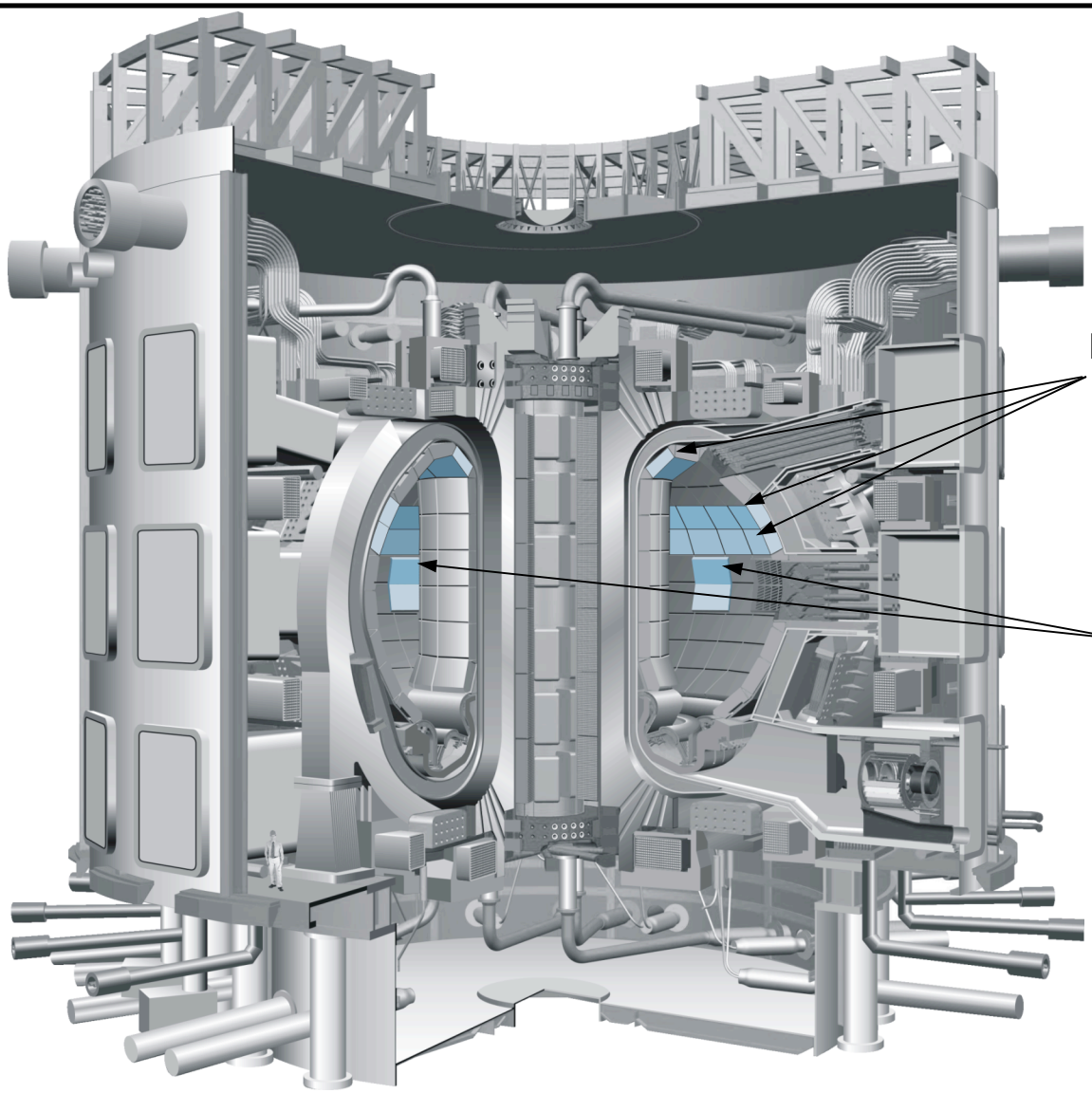

First Wall and Shield

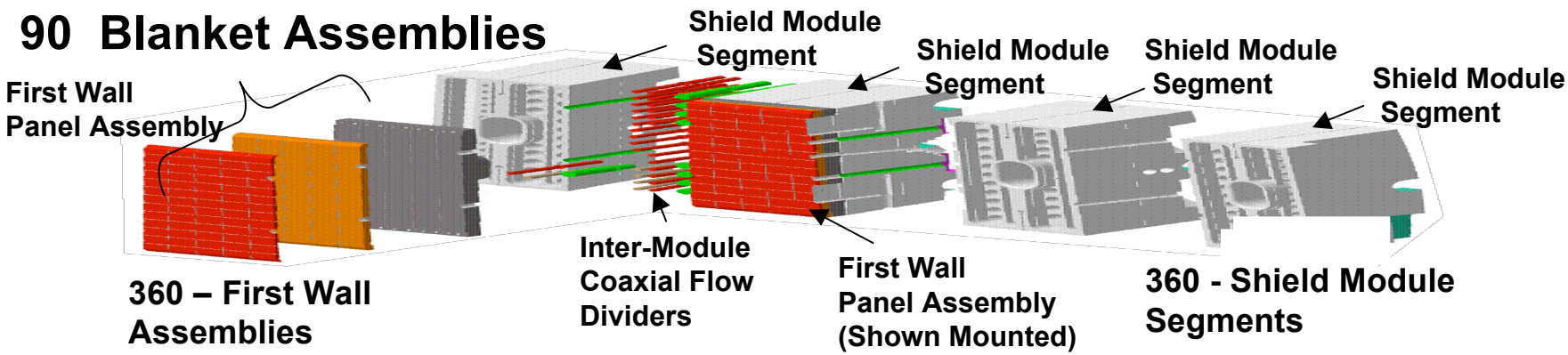

	R&D	Design & Fabrication
FY 2007:	Continue joining R&D for the first wall components and start materials and joining assembly R&D for shield components / modules.	Complete design for first wall and shield as included in U.S. scope. Draft Technical Specification Document with the IO.
FY 2008:	Complete all residual R&D work activities.	Issue Request for Proposals for first wall and shield components and award contract to construct first articles.
FY 2009:		Provide Title III for first wall and shield fabrication.

Port Limiter System

2 Port Limiter Assemblies

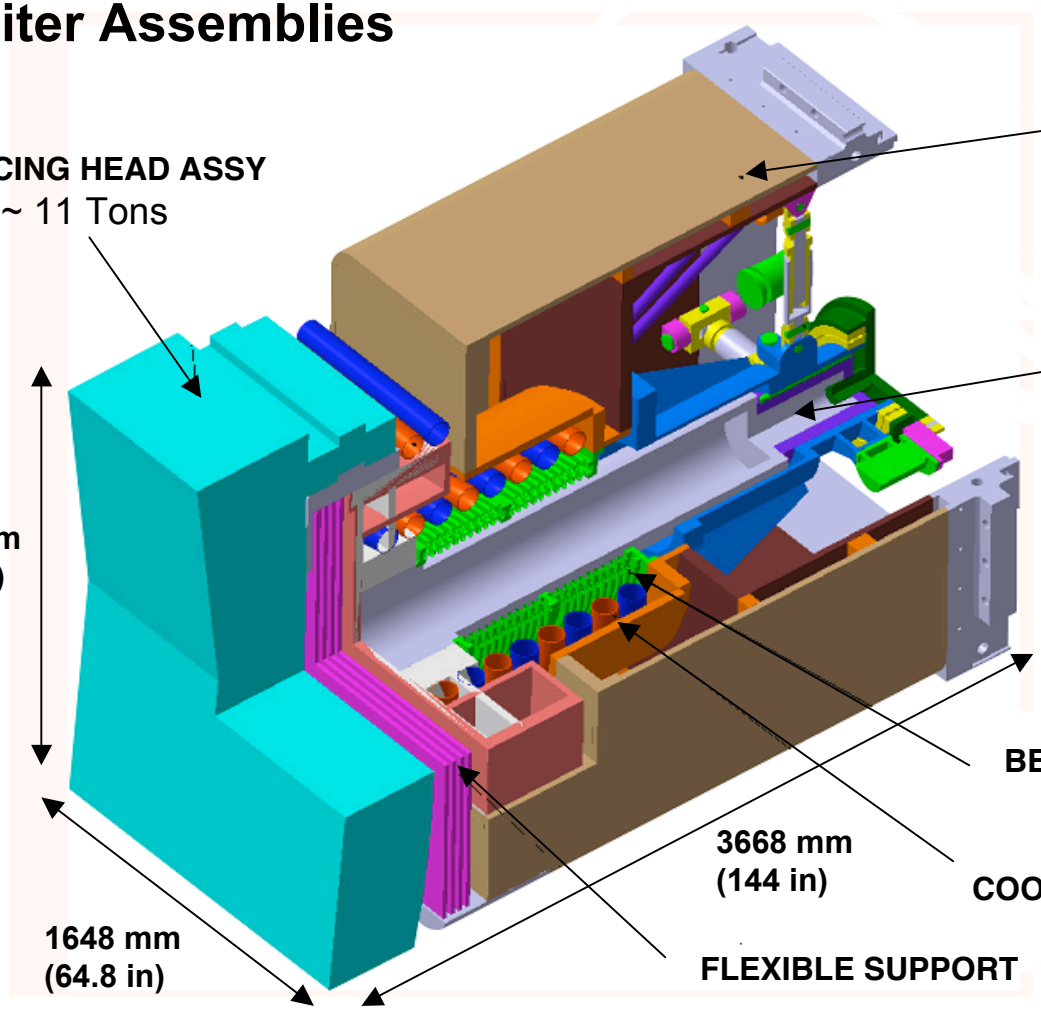

Port Limiters

	R&D	Design & Fabrication
FY 2007:	None.	Continue planning scope definition/clarification and concept development. Draft Technical Specification Document with the IO.
FY 2008:	Start joining, materials, and actuation R&D for port limiters.	Continue planning, concept development, and preliminary design.
FY 2009:	Complete residual R&D activities.	Prepare final design.

Tokamak Cooling Water System

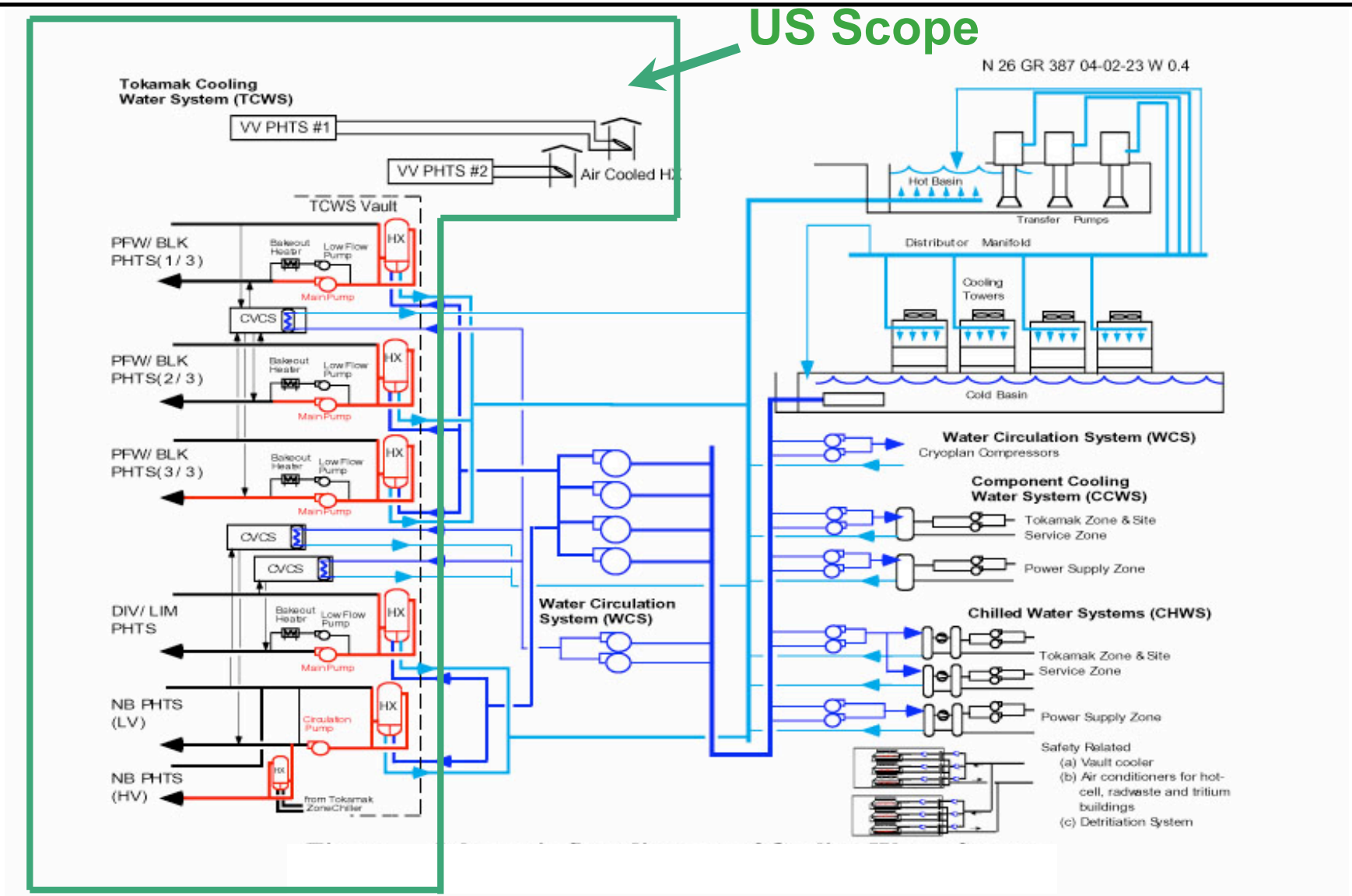

Tokamak Cooling Water System

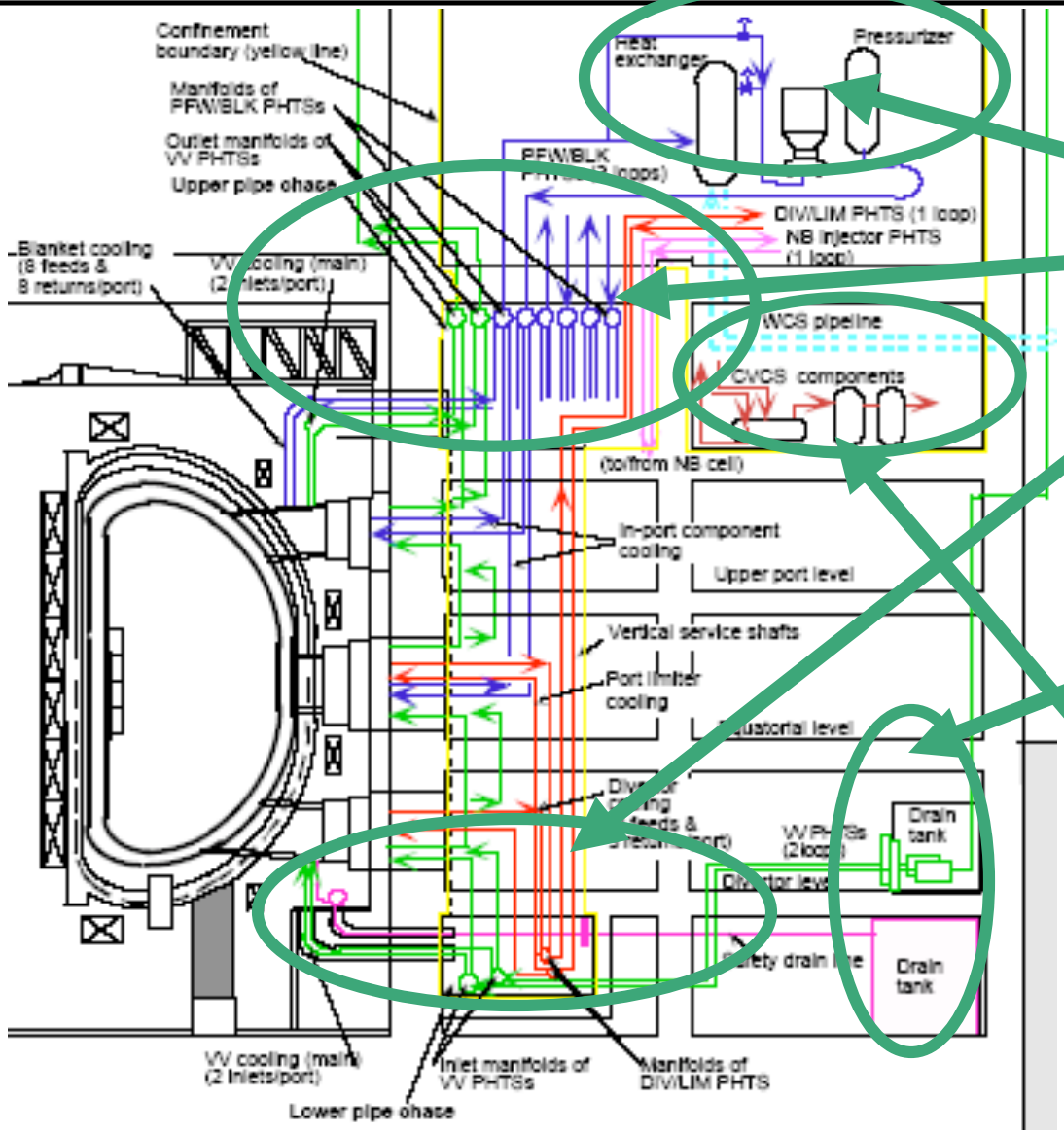

Primary Heat Transfer:

- **Vault**
- **Upper Pipe Chase**
- **Roof**
- **Lower Pipe Chase**

Support Systems:

- **Draining and Refilling (WBS1.2.1.6)**
- **Chemical and Volume Control System (WBS1.2.1.5)**
- **Drying (WBS1.2.1.7)**

Tokamak Cooling Water System

	R&D	Design & Fabrication
FY 2007:	No R&D required	Continue planning, requirements definition and interfaces with the IO; evaluate design, including modeling and A/E review.
FY 2008:		Begin detailed fabrication design /procurement of long-lead components.
FY 2009:		Begin fabrication/procurement of ealry-delivery components.

Vacuum Pumping System Deliverables

Roughing pump and valve box assemblies

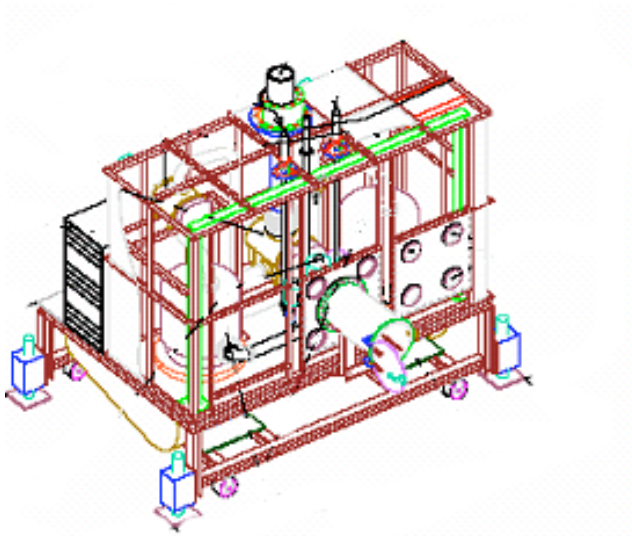

R&D and qualification tests of roughing pump system reliability and tritium compatibility

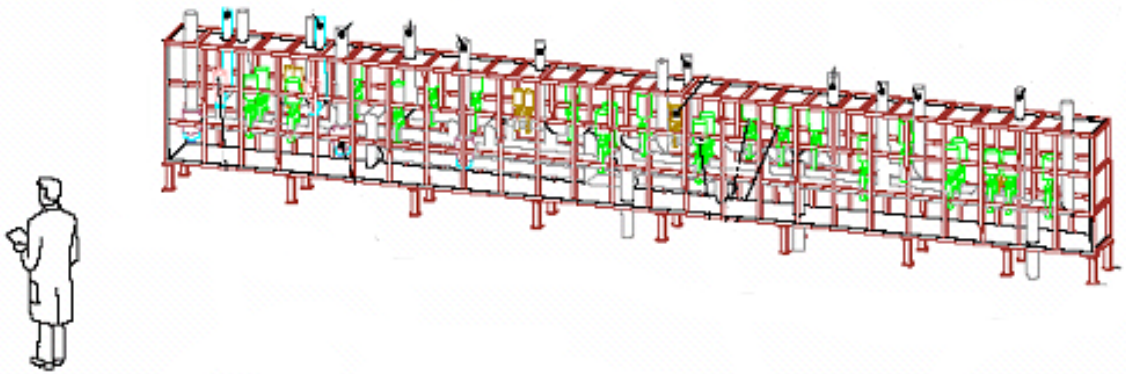

Standard vacuum components (~3000 parts)

Vacuum Equipment/Components

	R&D	Design & Fabrication
FY 2007:	Start R&D on the roughing pump system	Pumping package scope definition/clarification with the IO
FY 2008:	Continue R&D on the roughing pump system.	Continue pumping package scope definition/clarification with the IO
FY 2009:	Complete R&D on the roughing pump system.	Conceptual design for roughing pump sets and change over boxes

Pellet Fueling of ITER

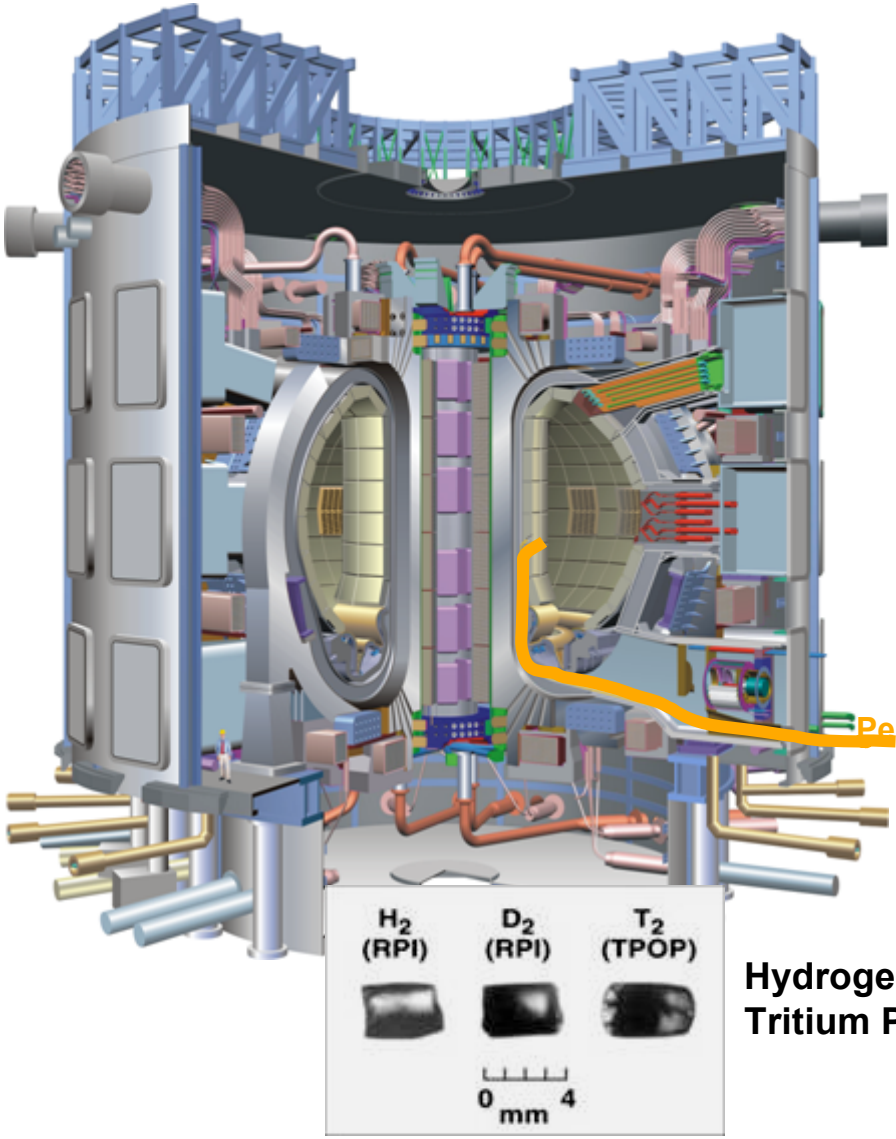

Hydrogen, Deuterium and Tritium Pellets @ 14° Kelvin

- Pellet injection to achieve efficient core tritium fueling
- R&D tests of pellet injector reliability tritium compatibility and High D/T fuel throughput
- High throughput extruder under development

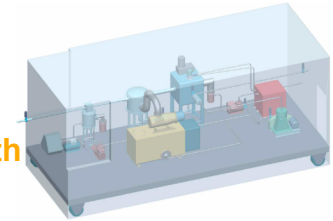

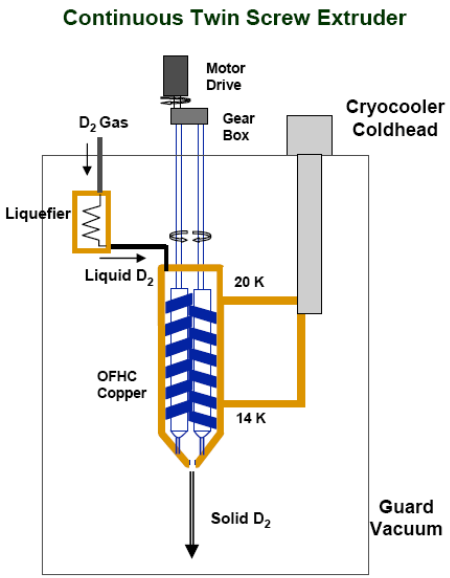

Pellet Injector

	R&D	Design & Fabrication
FY 2007:	Continue R&D on the extruder and guide tube prototype	Continue conceptual design for the pellet injector.
FY 2008:	Continue R&D on the extruder; start R&D on the pellet accelerator.	Continue conceptual design for the pellet injector system.
FY 2009:	Complete R&D on the extruder & pellet accelerator; start R&D on the guide tube	Begin preliminary design for pellet injector system.

Ion Cyclotron Transmission Lines

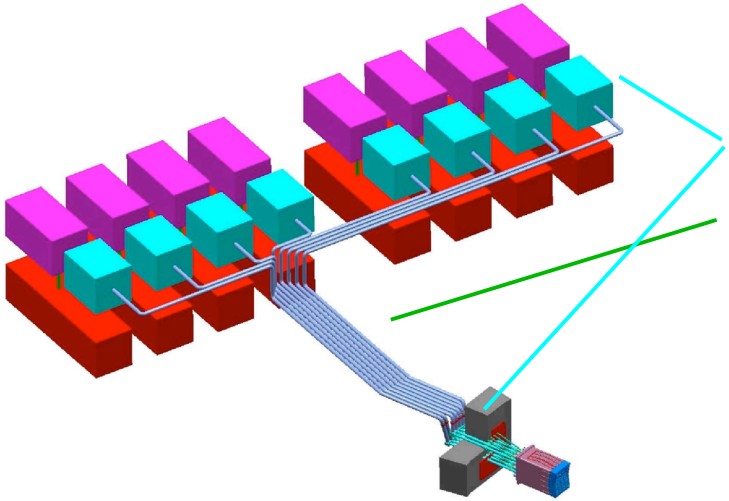

Transmission line and tuning

- Tuning/Matching components
- 8 water cooled coax lines @2.5 MW ea.
- 1000 m total length

5MW RF resonant ring test stand (ORNL) will be used to develop and qualify long pulse high power components

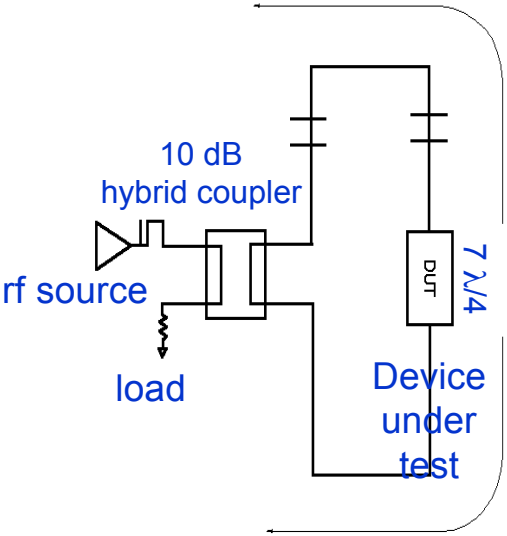

Test long pulse tuning components

Ion Cyclotron Transmission Lines

	R&D	Design & Fabrication
FY 2007:	Begin ion cyclotron transmission line R&D; commission high power test stands for gas and water cooling concepts.	Ion cyclotron transmission line package scope definition/clarification with the IO. Initial layout of ICH transmission line.
FY 2008:	Continue ion cyclotron transmission line and matching R&D using high power test stands.	Start preliminary design of ICH transmission line and matching system.
FY 2009:	Complete ion cyclotron transmission line and matching R&D program.	Continue preliminary design and evaluate design variants.

ECH Transmission Lines

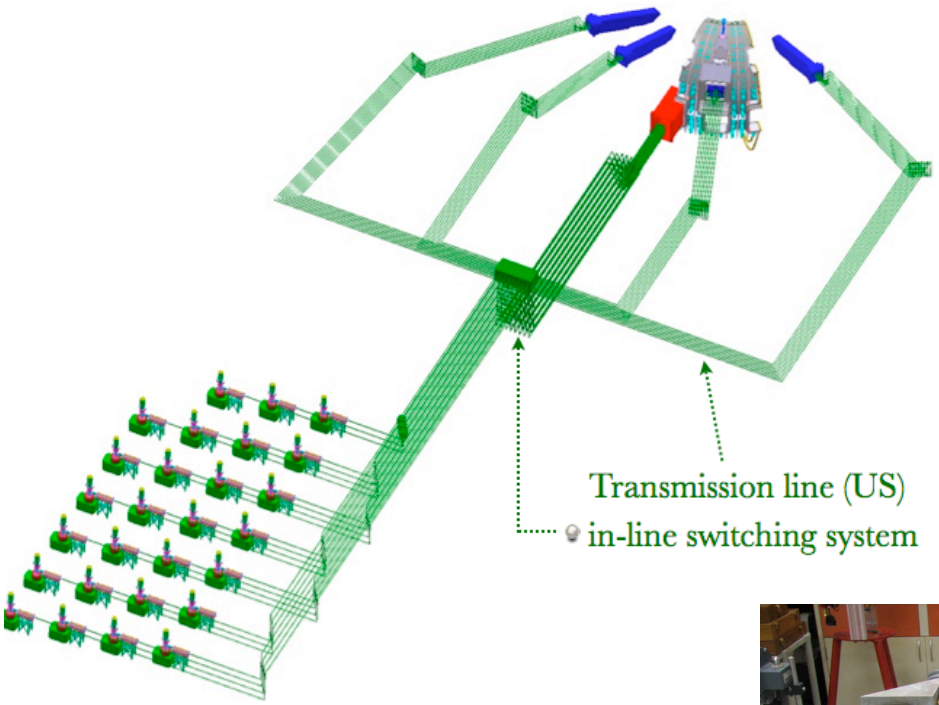

Waveguides with elbows and expansion joints

2MW 170 GHz resonant ring test stand will be used to qualify long pulse high power components

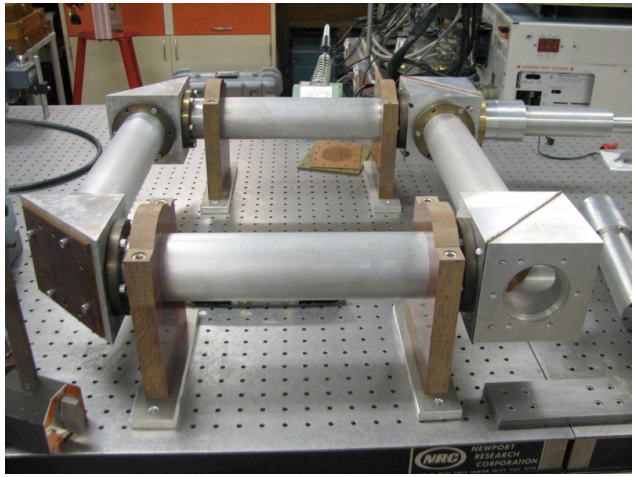

Electron Cyclotron Transmission Lines

	R&D	Design & Fabrication
FY 2007:	Continue electron cyclotron transmission line R&D; commission low power test stand for ohmic and mode conversion loss.	Electron cyclotron transmission line package scope definition/clarificat ion with the IO. Initial layout of ECH transmission line.
FY 2008:	Continue electron cyclotron transmission line and matching R&D; prepare high power test stand for ohmic and mode conversion loss.	Start preliminary design of ECH transmission line and mode control.
FY 2009:	Complete electron cyclotron transmission line and mode control R&D using high power test stand.	Continue preliminary design and evaluate design variants.

Steady State Electric Power

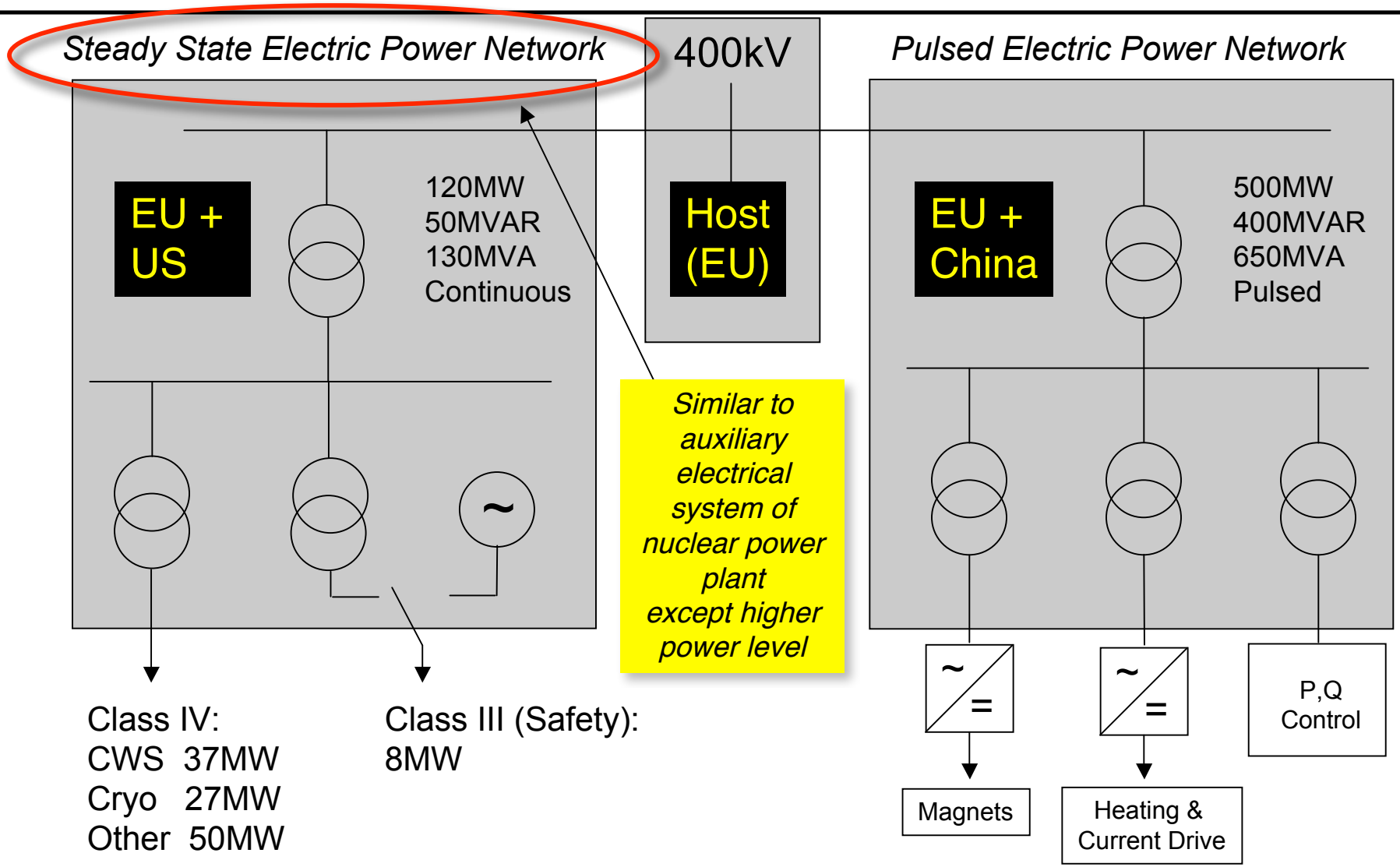

SSEPN Roles of EU and US

TASK	EU ROLE	US ROLE
Engineering Design	Lead	Monitor
Cabling	100%	
Diesel Generators & UPS systems	100%	
All other equipment from 400kV grid to consumer interface	25%	75%
Installation & Commissioning	Lead	

Steady State Electric Power Network

	R&D	Design & Fabrication
FY 2007:	No R&D required	Monitor preliminary design activity by EU and maintain cost estimates current.
FY 2008:		Participate in Preliminary Design Review, Monitor final design activity by EU and maintain cost estimates current.
FY 2009:		Monitor final design activity by EU and maintain cost estimates current, Participate in Final Design Review, Finalize Procurement Arrangement

Tokamak Exhaust Processing

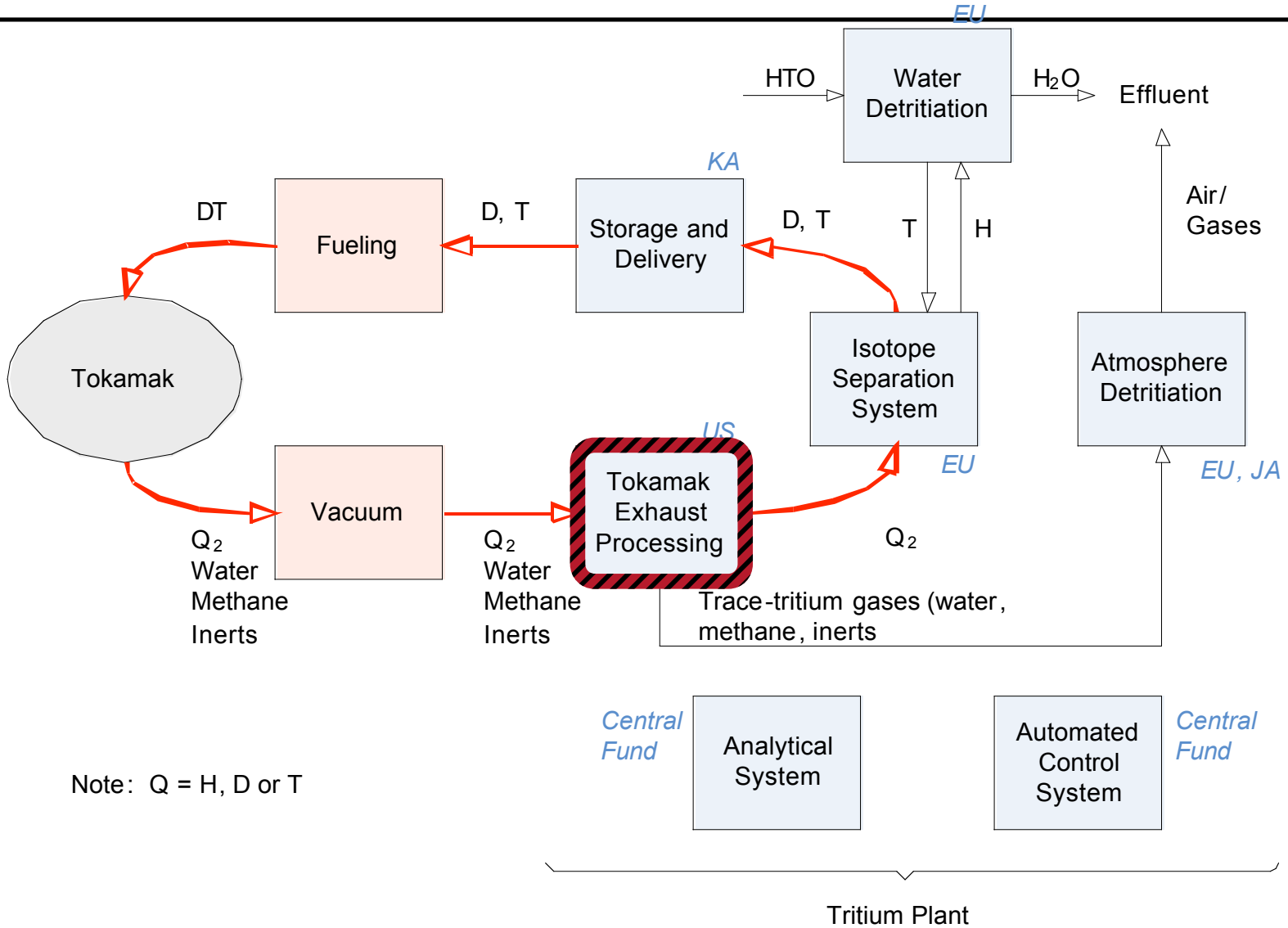

Note: Q = H, D or T

Tokamak Exhaust Processing

	R&D	Design & Fabrication
FY 2007:	Continue tritium plant R&D.	Continue planning and scope definition/clarification with the IO; begin preliminary design.
FY 2008:	Complete tritium plant R&D studies/tests.	Start final design.
FY 2009:		Complete build to spec design.

Diagnostic Instrumentation

- Diagnostics are the means by which we observe the ITER plasma behavior, measuring some ~ 45 parameters.
- The US has been allocated 16% of the ITER diagnostics.
- Implementing diagnostic front-end components, deeply embedded in massive port plug shield, and functioning in the harsh ITER environment, will be new and technically challenging.
- Diagnostics experts in the US Fusion Community are eager to meet these challenges.

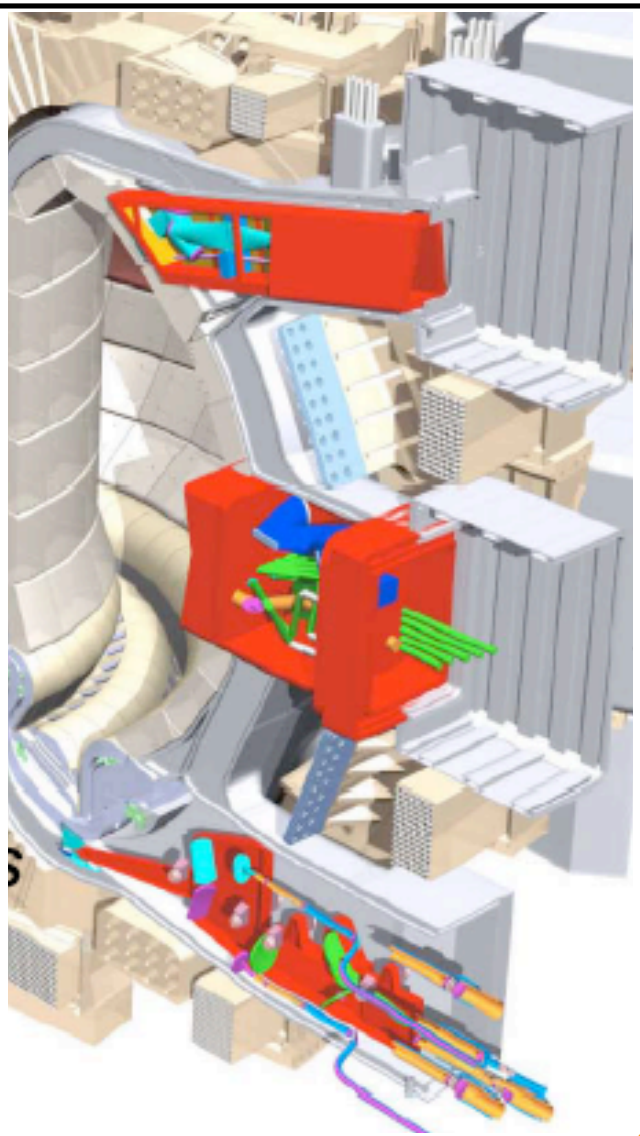

U.S. Diagnostic Scope

WBS	Instrumentation Packages	Scope
1.5.3.1	Upper IR/Visible Cameras	Packages include 'front-end' viewing optics, relay optics or waveguides in the ports, along with additional relay systems to bring signals to diagnostic hall, and source and detector hardware in the diagnostic hall. Some have viewing systems in ports provided by other parties. Package includes oversight of testing on ports prior to shipment to ITER
1.5.3.2	Low Field Side Reflectometry	
1.5.3.3	Motional Stark Effect	
1.5.3.4	Electron Cyclotron Emission	
1.5.3.5	Divertor Interferometer	
1.5.3.10	Toroidal Interferometer/Polarimeter	
1.5.3.6	Residual Gas Analyzer	Requirements not well defined
	Port Packages	
1.5.3.7	Upper Ports (U5, U17)	Packages include design, fabrication, assembly and testing of US port plugs Preliminary integration assumed to be done by IT – subject to IT approval.
1.5.3.8	Equatorial Ports (E3, E9)	
1.5.3.9	Lower Port Structures (L8)	
1.5.3.11	Diagnostic Management	Oversight and coordination

Diagnostics

	R&D	Design & Fabrication
FY 2007:	Assess R&D needs. Begin R&D in some area, and continue in others.	Complete initial assessment studies. Refine planning and scope definition with the IO.
FY 2008:	Continue diagnostics R&D.	Start preliminary design for some systems.
FY 2009:	Continue diagnostics R&D.	Continue preliminary designs. Begin detailed designs for some systems.

Outline

- **Federal Program Manager's Overview**
- **U.S. contributions**
  - Hardware contributions
  - Staff and Cash
  - Project Management
- **Budget cross-cuts**
- **Summary**

The ITER Organisation (IO) 2006 / 2007

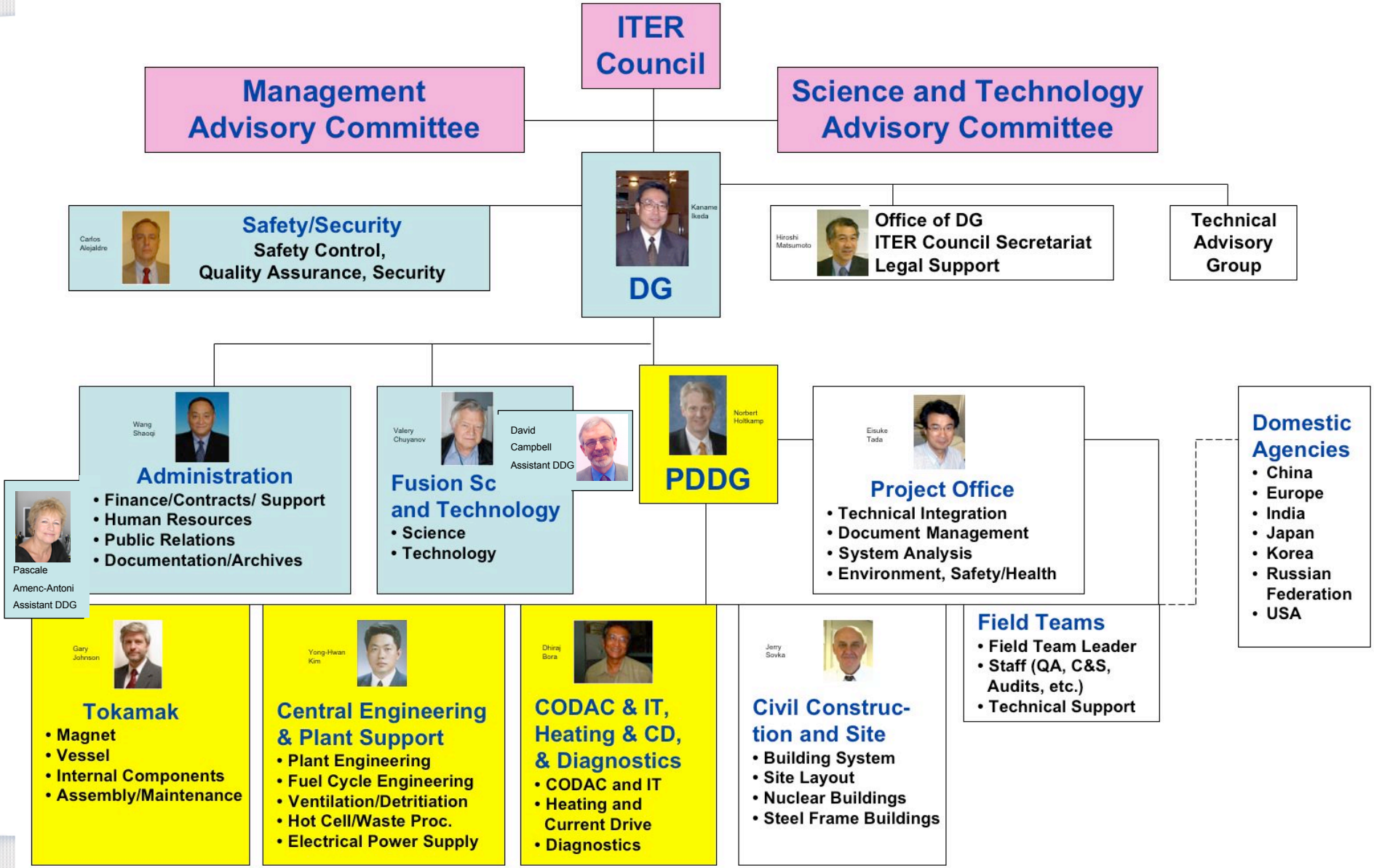

Our U.S. Secondees

Support to the International Organization

	IO Staff Support (Employees and Secondees)	Cash Contribution*
FY 2007:	~ 20 man years	$6M
FY 2008:	~35 man years	$20M
FY 2009:	~40 man years	$30M

*Will support IO organization expenses, IO directed R&D, work scope to be accomplished with the general FUND, IO contingency

Outline

- **Federal Program Manager's Overview**
- **U.S. contributions**
  - Hardware contributions
  - Staff and Cash
  - Project Management
- **Budget cross-cuts**
- **Summary**

The U.S. ITER Integrated Project Team Structure

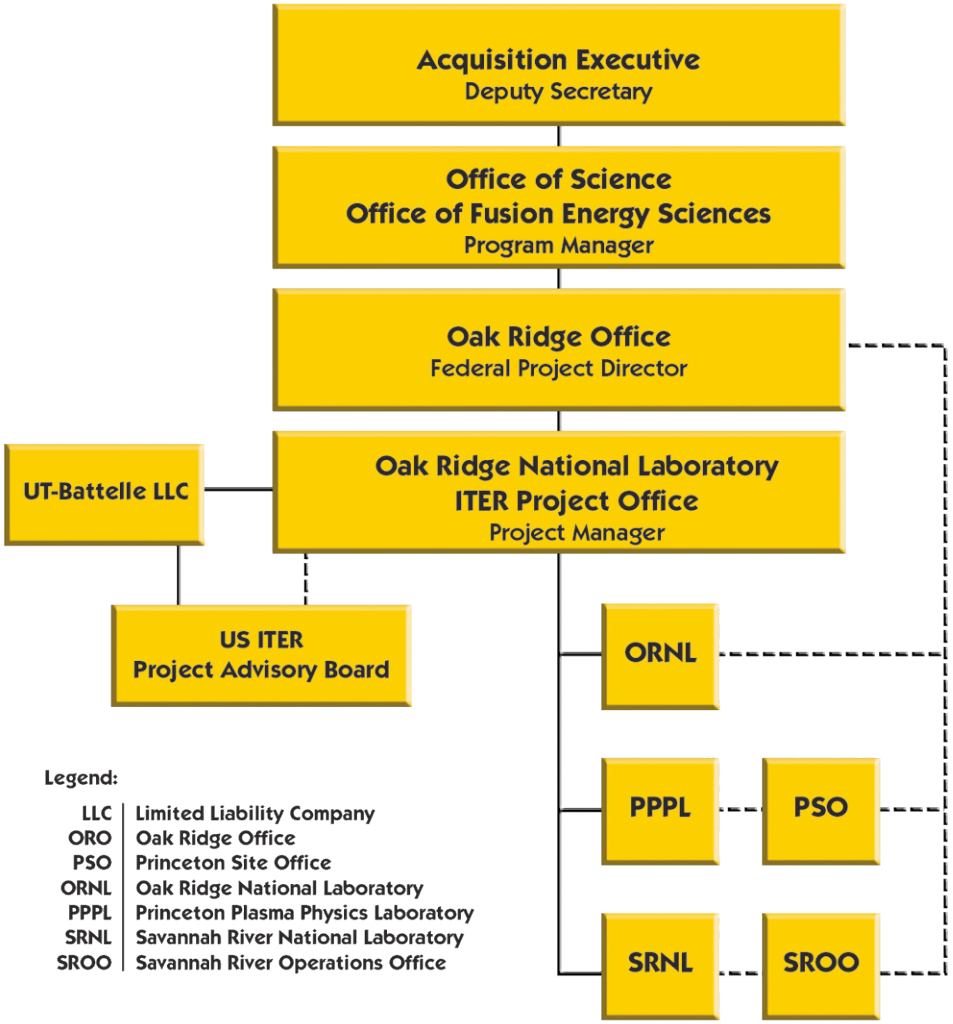

The USIPO Management Team

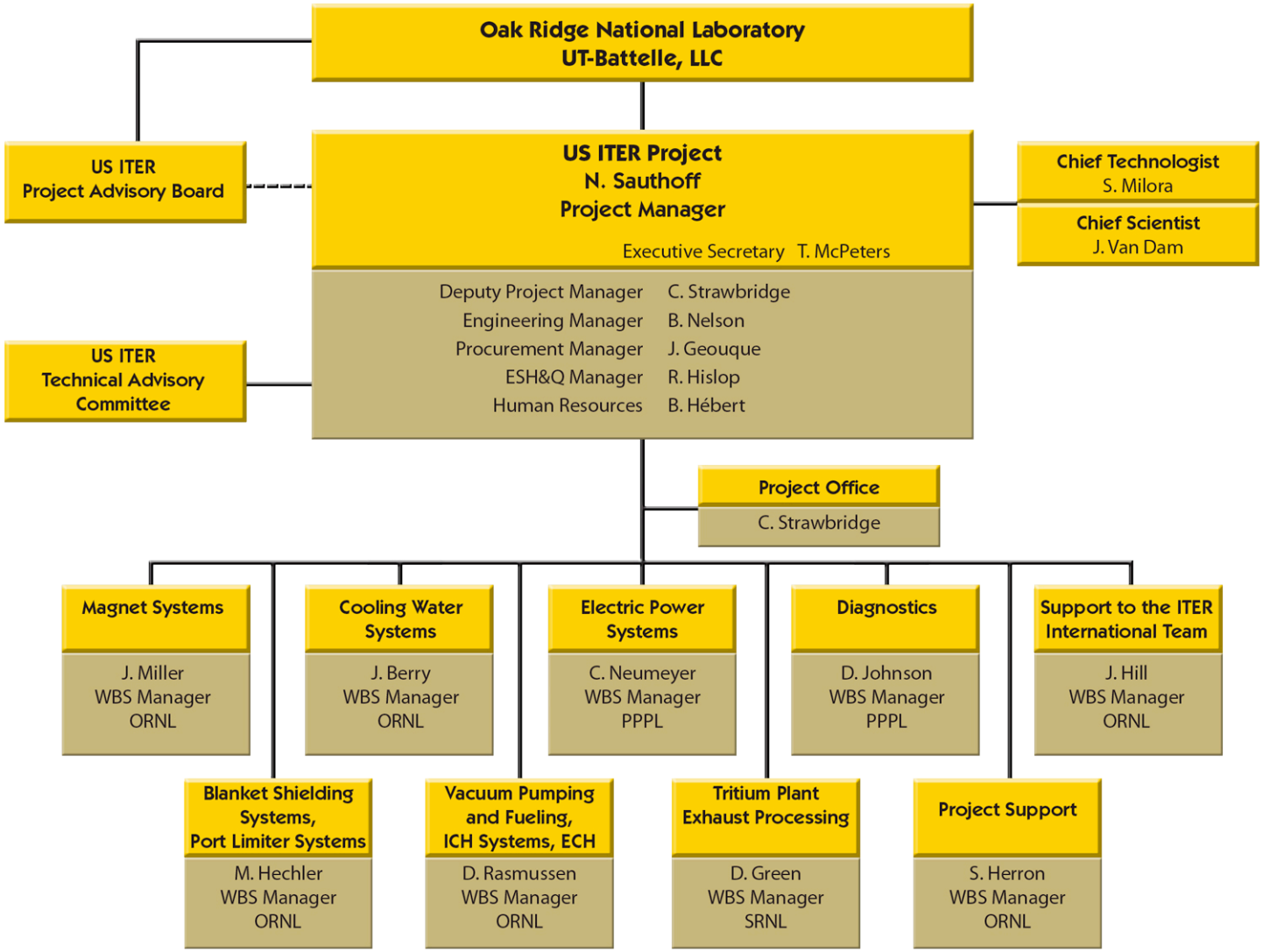

ITER Project Working Groups

Working Groups, Including Hyperlinks to Web, IDM and Email **(Last Update 09 Nov 2006)**

Secretary John How	**Quality Assurance**	**Computer Aided Design**	**Codes and Standards**	**Information Technology**	**Planning and Scheduling**	**Procurement**
Web Link	QA Web		Syst. Eng. Web Letter to PTs	IT-WG Web	P&S WG Web	Proc-WG web
IDM Link	QA IDM	CAD WG	C&S TF	IT-Working Group		
ITER Coordinator	K.Sowder	E.Martin	J-P Girard	H-W Bartels	Larry Lew	N.Holtkamp (Sec: A.Maas)
China	Caipin Zhou	Yuntao Song	Damao Yao	Weishan Kang	Songtao Wu & Caipin Zhou	Prof. Xie jikang (changed 9/11/06)
India	B. Doshi	R. Prakash	B. Doshi	I. Bandyopadhyay	R. Prakash	S K Mattoo
Korea (plus deputy)	H. J. Kim (J.H.Han)	N. I. Her (B. C. Kim)	S. I. Lee (H. J. Kim)	I. S. Choi	H. U. Ko (B. C. Kim)	B. S. Lim (H. J. Kim)
Japan (plus deputy)	M.Higuchi (Y. Neyatani)	K.Koizumi	M.Higuchi	K.Koizumi	K.Koizumi	M.Mori (Y. Neyatani)
Russia	V.Muratov	V.Muratov	G.Kalinin	I.Semenov	L. Makarova	V.Belyakov
USA	**M.Skonicki**	**B. Nelson**	**B. Nelson**	**Dan Ciarlette**	**S. Herron**	**J. Geouque**
Europe	M.Peyrot	F. Casci	M. Ferrari	K.Thomsen	M. Ferrari	E.Di Pietro
Additional Experts			G.Sannazzaro (ITER)	J.Lister (ITER) B.Wilhelm (EFDA) Yuntao Song (CN) H. U. Ko (KO)		

© ITER International Team, Cadarache, Last update:

Project Management Budget is flat throughout the years

Budget includes labor, travel, office space, materials, and services for the following:

- **Project Management**
  - Project Manager, Deputy Project Manager, and seven WBS managers
- **Environmental, Safety, Health**
- **Quality Assurance**
- **Procurement**
- **Systems Engineering and Design Intergration**
- **Business/Finance**
- **Project Controls**
- **Document/Records Management**
- **Information Systems**
- **HR**
- **Communications**

Outline

- **Federal Program Manager's Overview**
- **U.S. contributions**
  - Hardware contributions
  - Staff and Cash
  - Project Management
- **Budget cross-cuts**
- **Summary**

U.S. ITER Annual Budget Profile ($M)

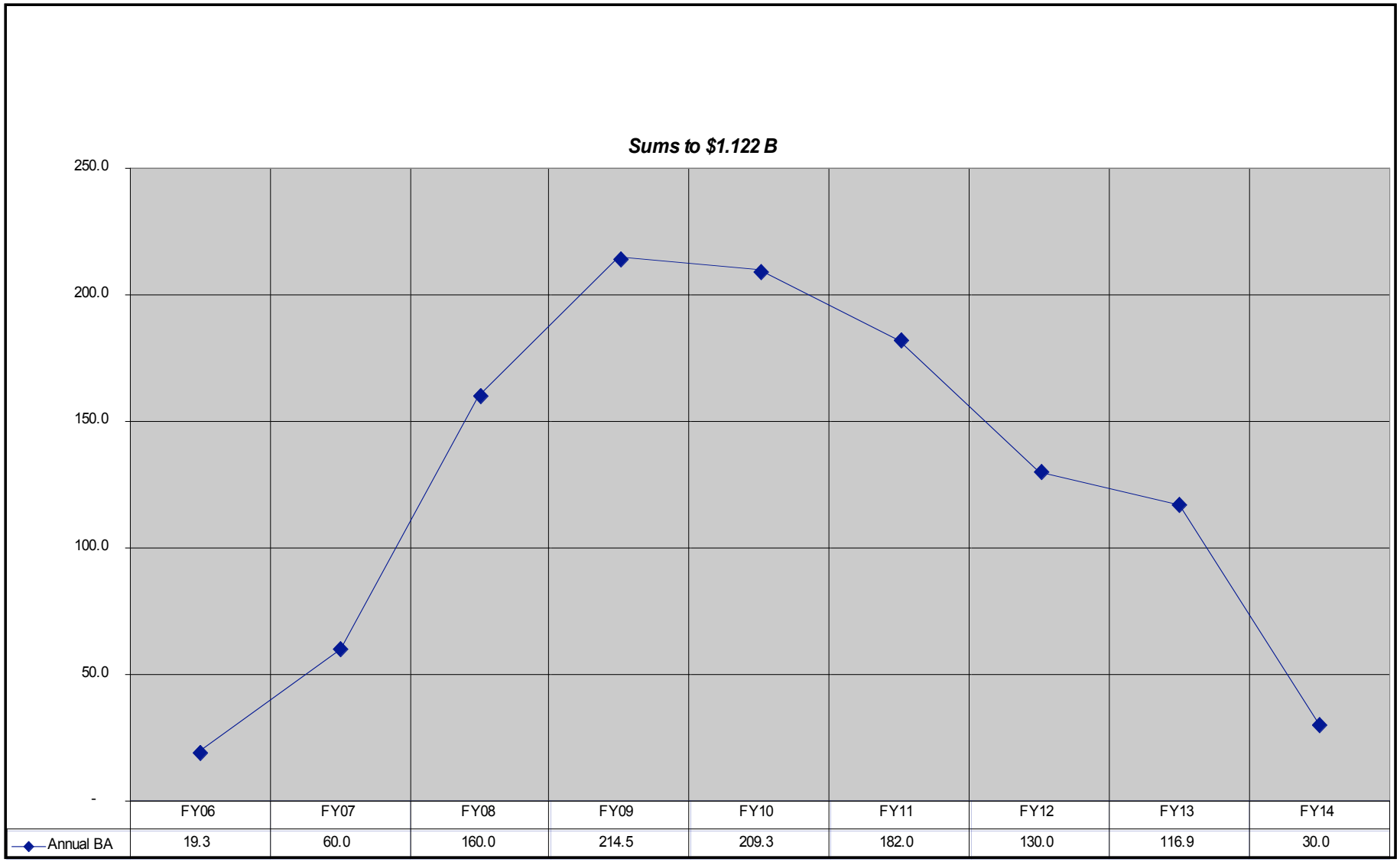

Summary of Budgets

by Major Areas of Contribution

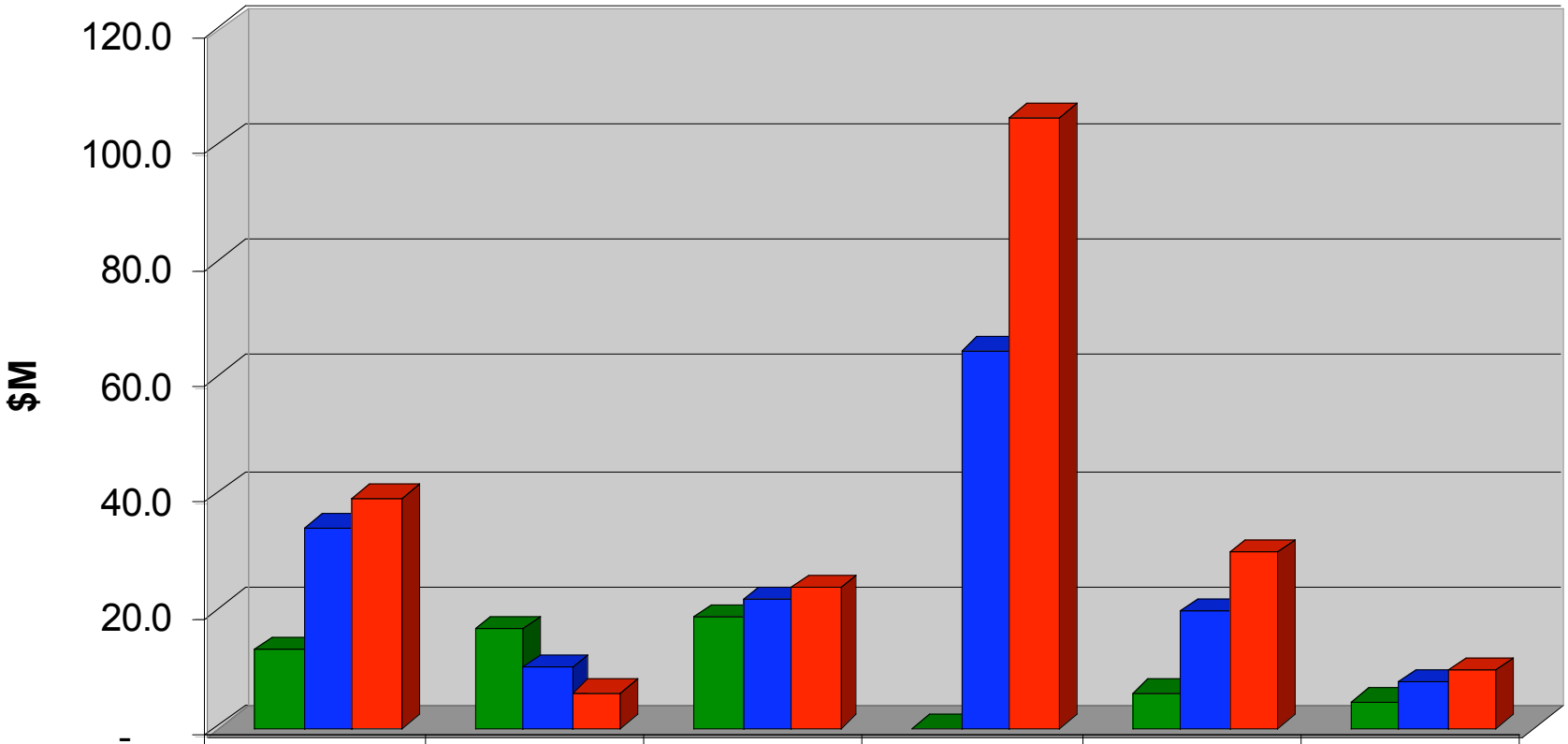

	Project Mgmt / Contingency	Research & Development	Design	In-Kind Hardware Contributions	Cash to IO	IO Staff
FY07	13.5	17.0	19.0	-	6.0	4.5
FY08	34.5	10.5	22.0	65.0	20.0	8.0
FY09	39.5	6.0	24.0	105.0	30.0	10.0

Summary of Budgets

by Year

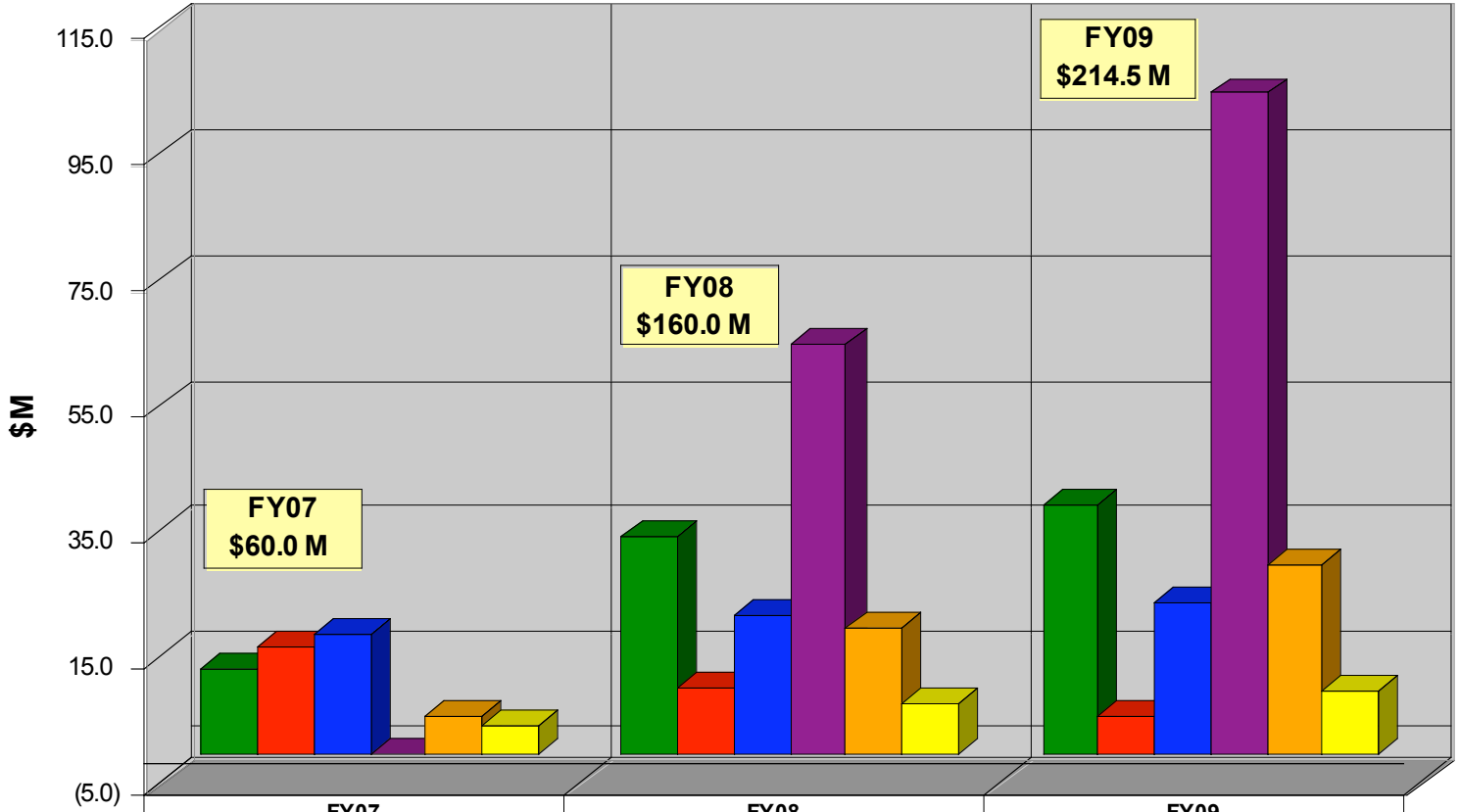

	FY07	FY08	FY09
Project Mgmt / Contingency	13.5	34.5	39.5
Research & Development	17.0	10.5	6.0
Design	19.0	22.0	24.0
In-Kind Hardware Contributions	-	65.0	105.0
Cash to IO	6.0	20.0	30.0
IO Staff	4.5	8.0	10.0

Distribution Among Performers by FY

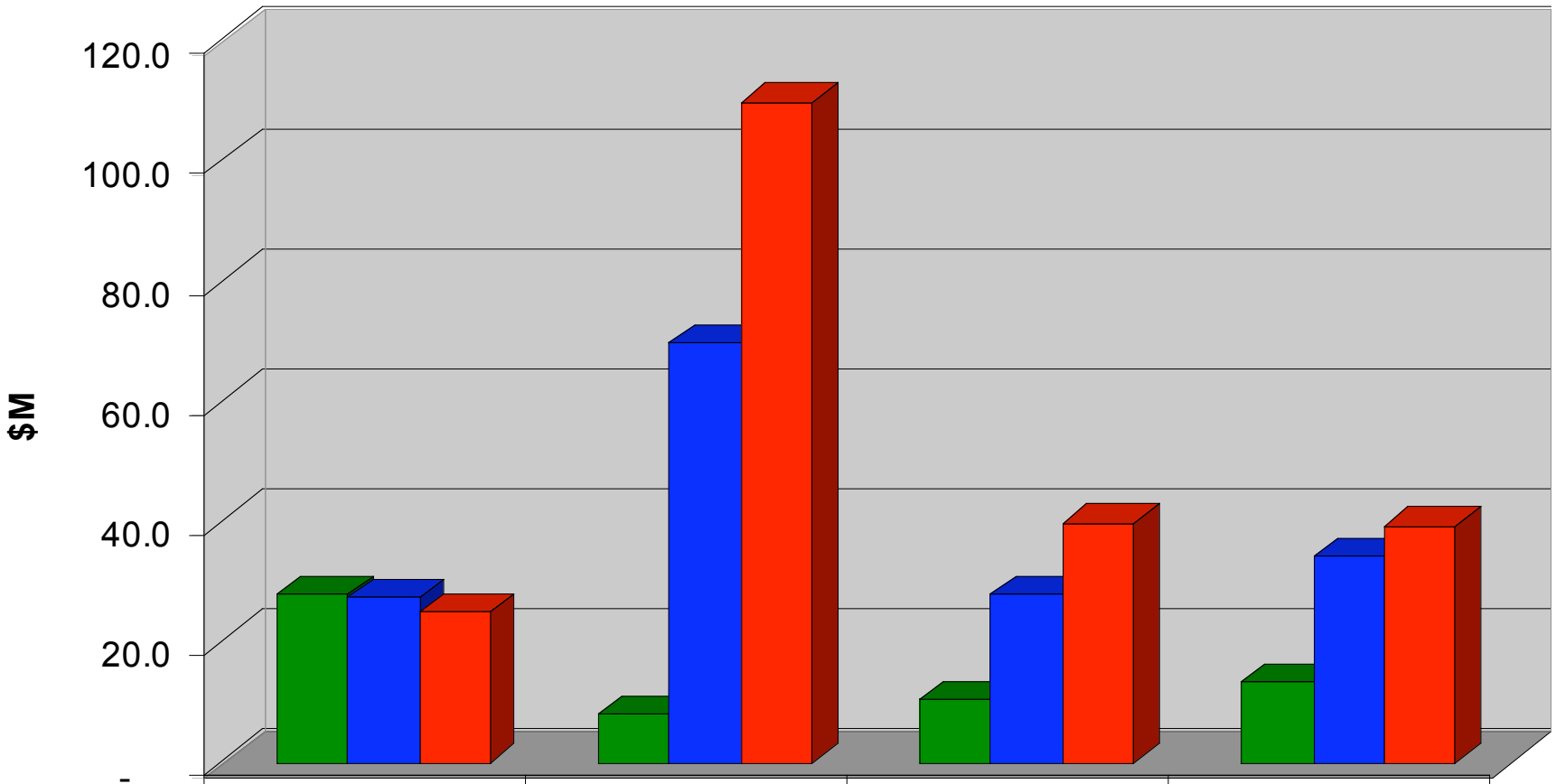

	Fusion Community	Industry	ITER Organization	Project Mgmt / Contingency
FY07	28.0	8.0	10.5	13.5
FY08	27.5	70.0	28.0	34.5
FY09	25.0	110.0	40.0	39.5

Outline

- **Federal Program Manager's Overview**
- **U.S. contributions**
  - Hardware contributions
  - Staff and Cash
  - Project Management
- **Budget cross-cuts**
- **Summary**

Outline

- **Federal Program Manager's Overview**
- **U.S. contributions**
  - Hardware contributions
  - Staff and Cash
  - Project Management
- **Budget cross-cuts**
- **Summary**

Summary

- **The ITER Agreement has been signed and the construction phase has now finally begun!**

- **The ITER Organization and U.S. are working toward finalization of U.S. procurement arrangements**
  - The U.S. is helping to jumpstart the IO's project management and business systems infrastructure
  - The U.S. is temporarily filling several IO vacancies to enable US scope progress
  - An ITER Design Review is underway to prepare the 2007 Design Baseline, resolve priority issues, and develop a preliminary experimental operations plan

- **FY07-09 spans the transition to fabrication**
  - Completion of R&D and prototyping
  - Completion of much design
  - Start of fabrication